Embedded Crypto: SPECK

Lauren De Meyer, Candace Ross

Background on Speck

- **What is a block cipher?**

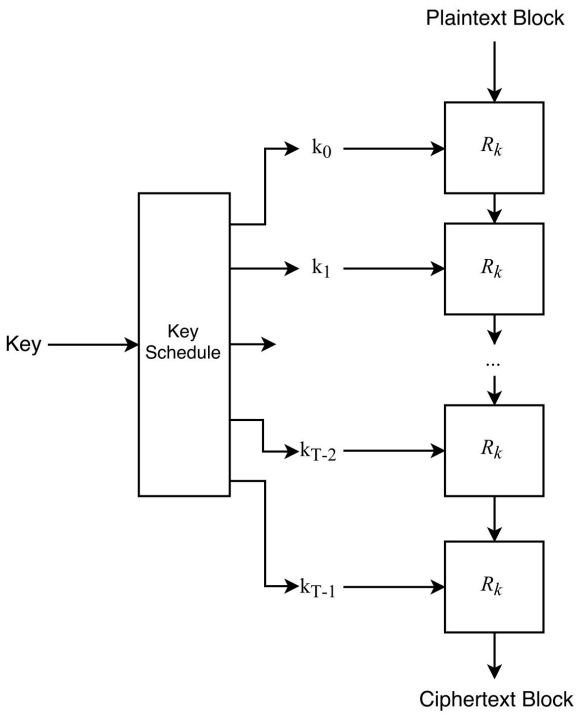

- **SPECK round function:**

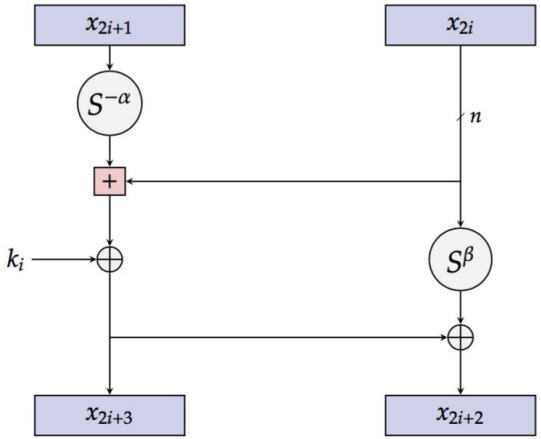

- Efficient:
  - Modular addition
  - Rotation
  - XOR

Folded Design

- Focus: small area!
- Folded:
  - 1 stage
  - 1 round function
- Key schedule in parallel
  - Better than storage

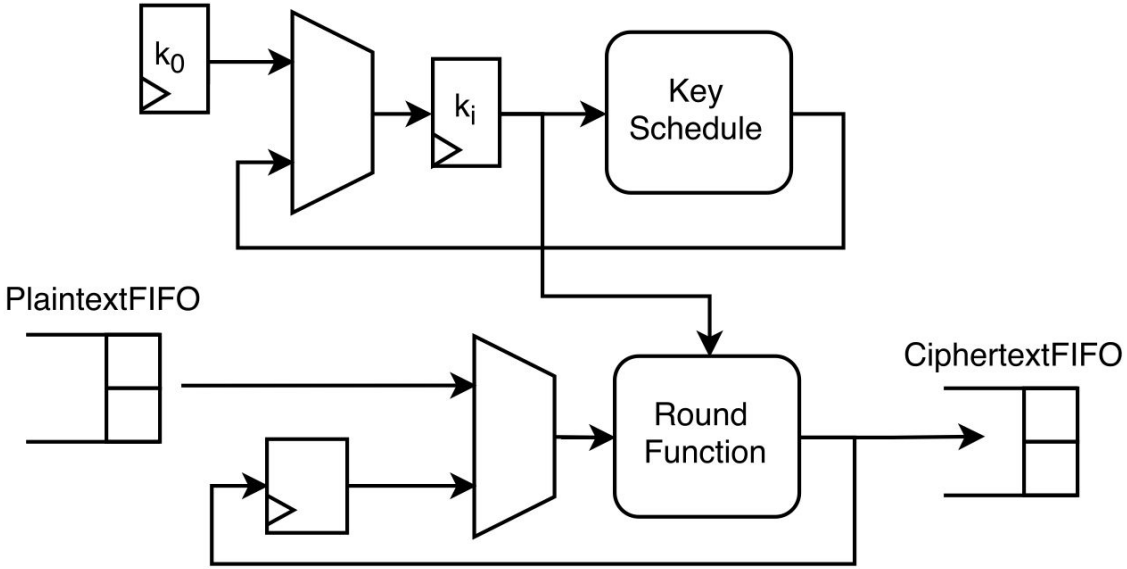

Design Exploration

We compared folded and unfolded designs

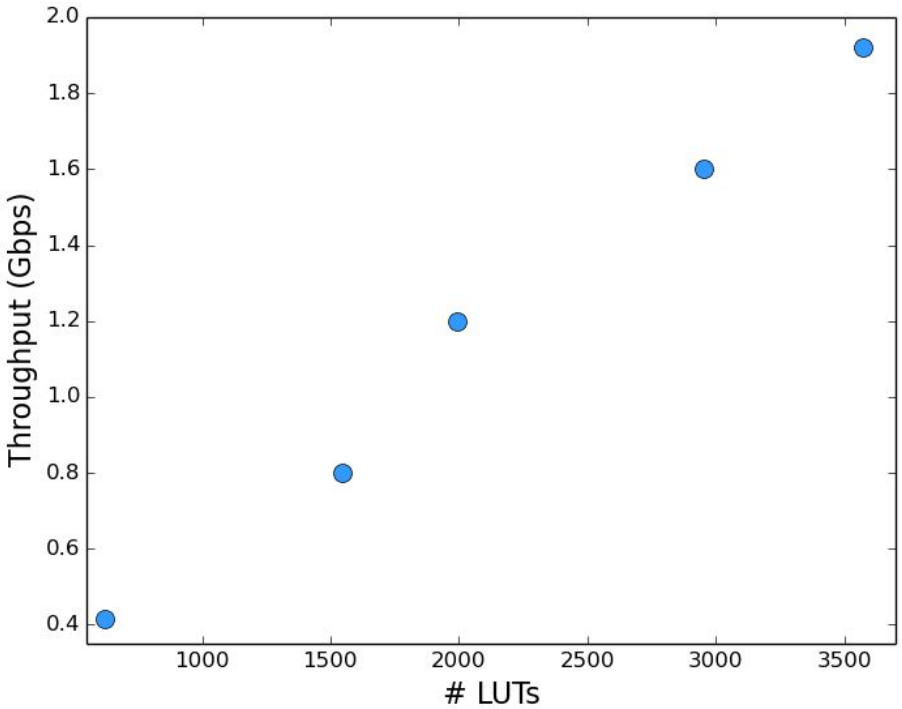

Results

- **Software Implementation (C)**
  - Throughput: 240 Mbps

- **Hardware Implementation**
  - Throughput: 400 Mbps

- **Clock frequency: 200MHz**

Setup of the DEMO