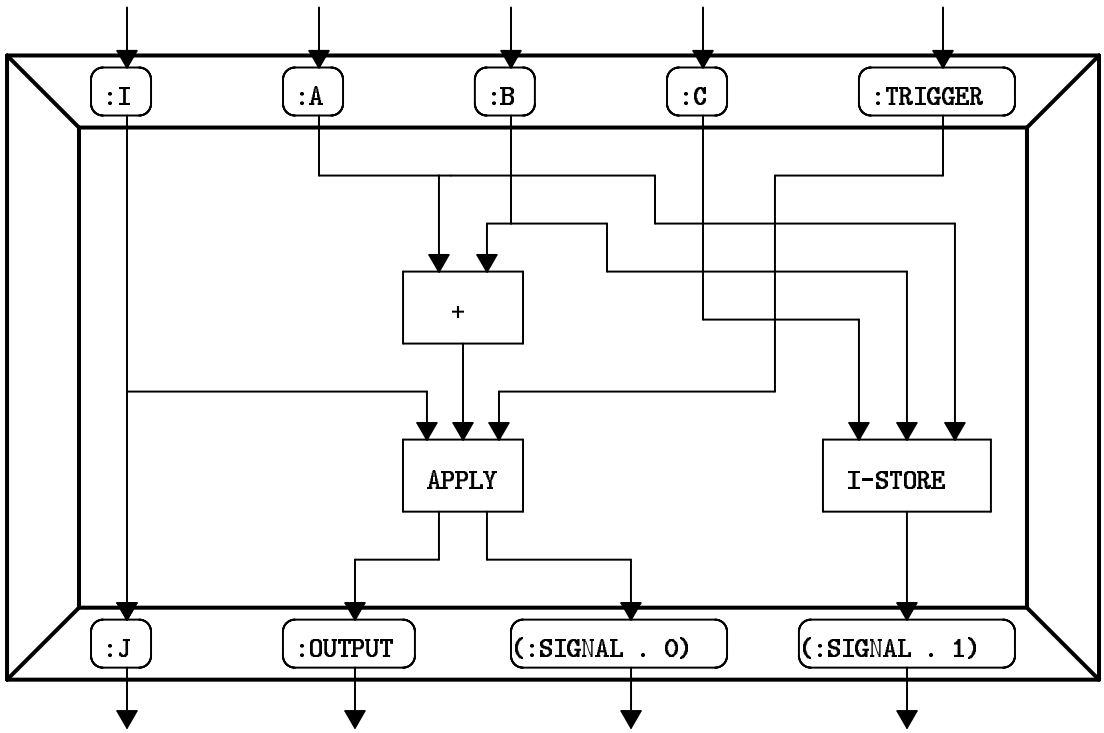
:I
:A
:B
:C
:TRIGGER
+
APPLY
I-STORE
:J
:OUTPUT
(:SIGNAL . 0)
(:SIGNAL . 1)