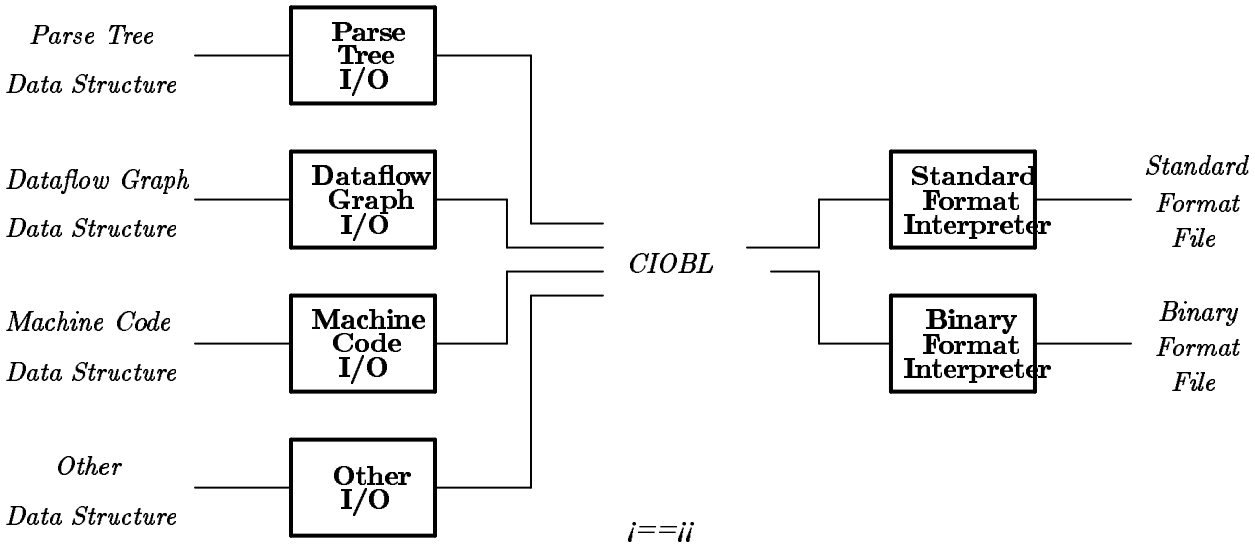
Parse Tree
Data Structure
Parse Tree I/O
Dataflow Graph
Data Structure
Dataflow Graph I/O
Machine Code
Data Structure
Machine Code I/O
Other
Data Structure
Other I/O
CIOBL
Standard Format Interpreter
Standard Format File
Binary Format Interpreter
Binary Format File
i==ii