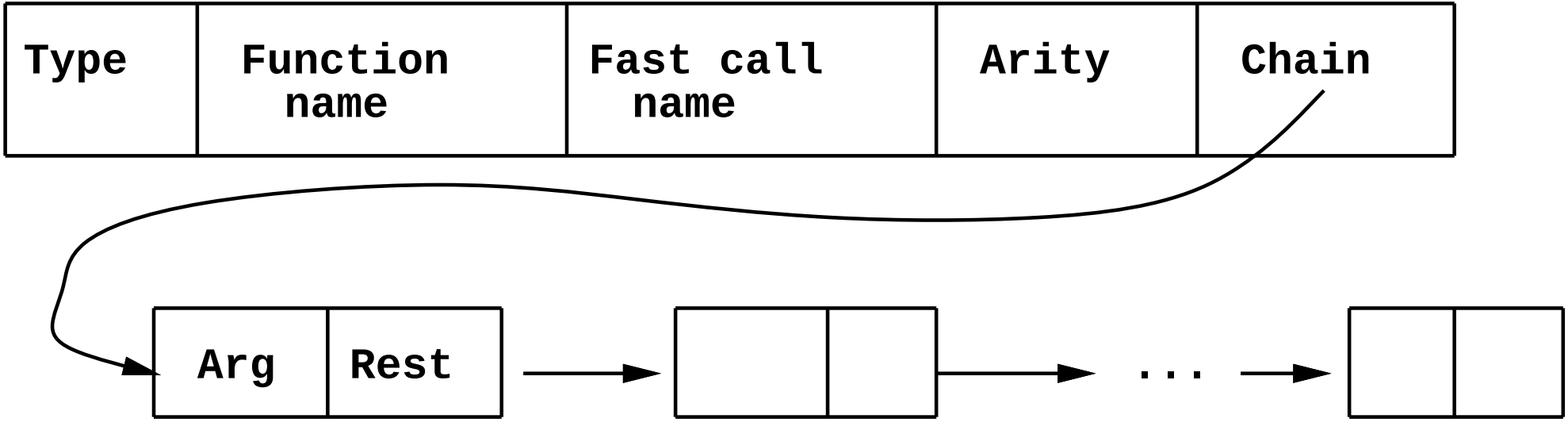
Type
Function name
Fast call name
Arity
Chain
Arg
Rest
...