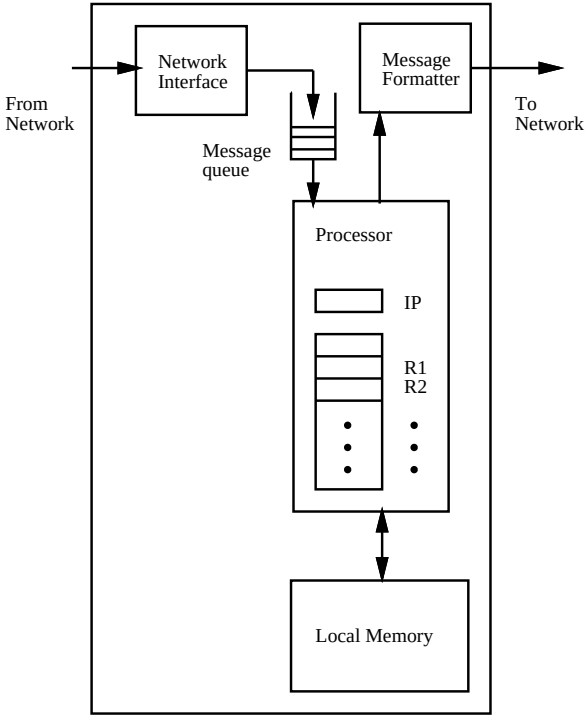
Network
Interface
Message
Formatter
From
Network
To
Network
Message
queue
Processor
IP
R1
R2
Local Memory