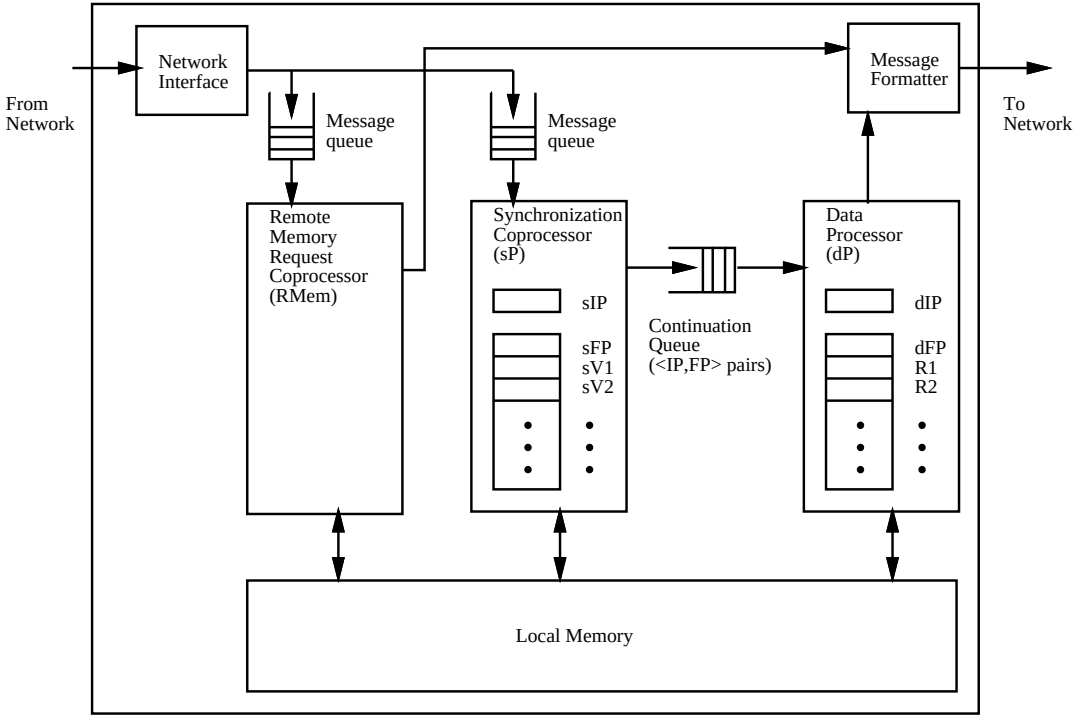
From
Network
Network
Interface
Message
queue
Message
queue
Message
Formatter
To
Network
Remote
Memory
Request
Coprocessor
(RMem)
Synchronization
Coprocessor
(sP)
sIP
sFP
sV1
sV2
Continuation
Queue
(<IP,FP> pairs)
Data
Processor
(dP)
dIP
dFP
R1
R2
Local Memory