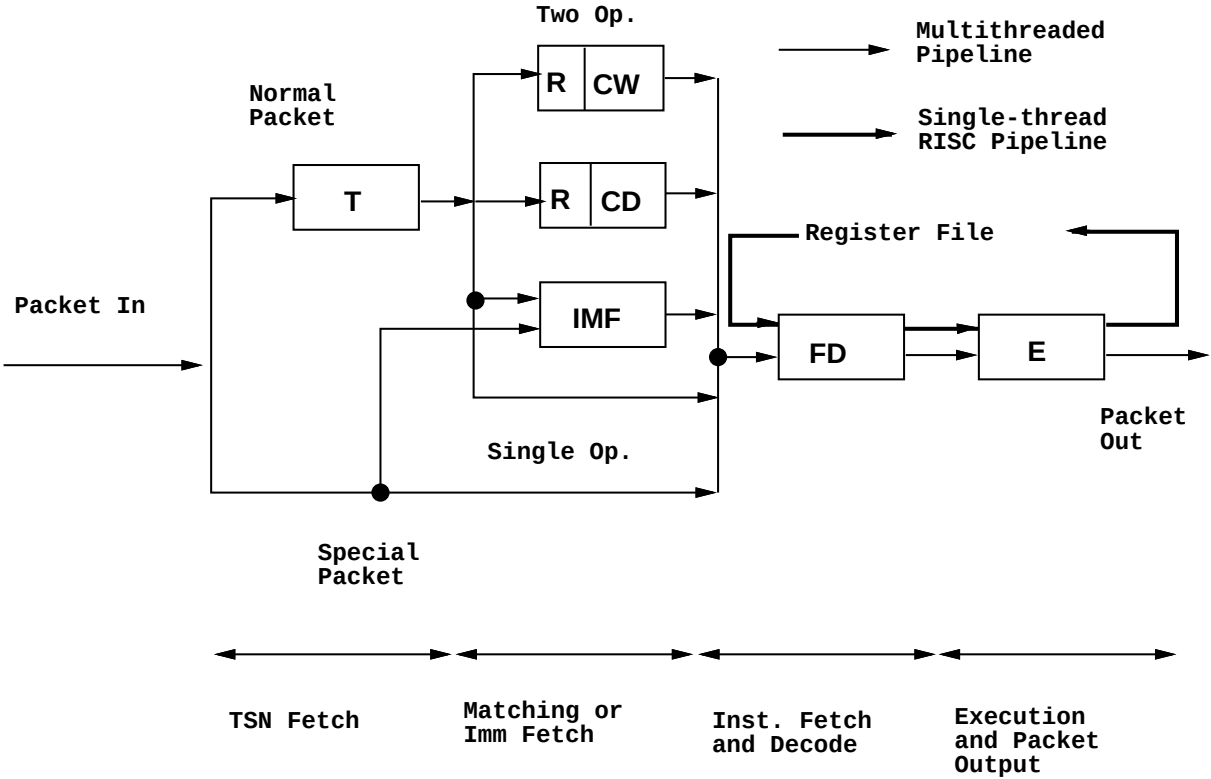
Two Op.
Multithreaded Pipeline
Single-thread RISC Pipeline
Normal Packet
R
CW
T
R
CD
Register File
Packet In
IMF
FD
E
Packet Out
Single Op.
Special Packet
TSN Fetch
Matching or Imm Fetch
Inst. Fetch and Decode
Execution and Packet Output