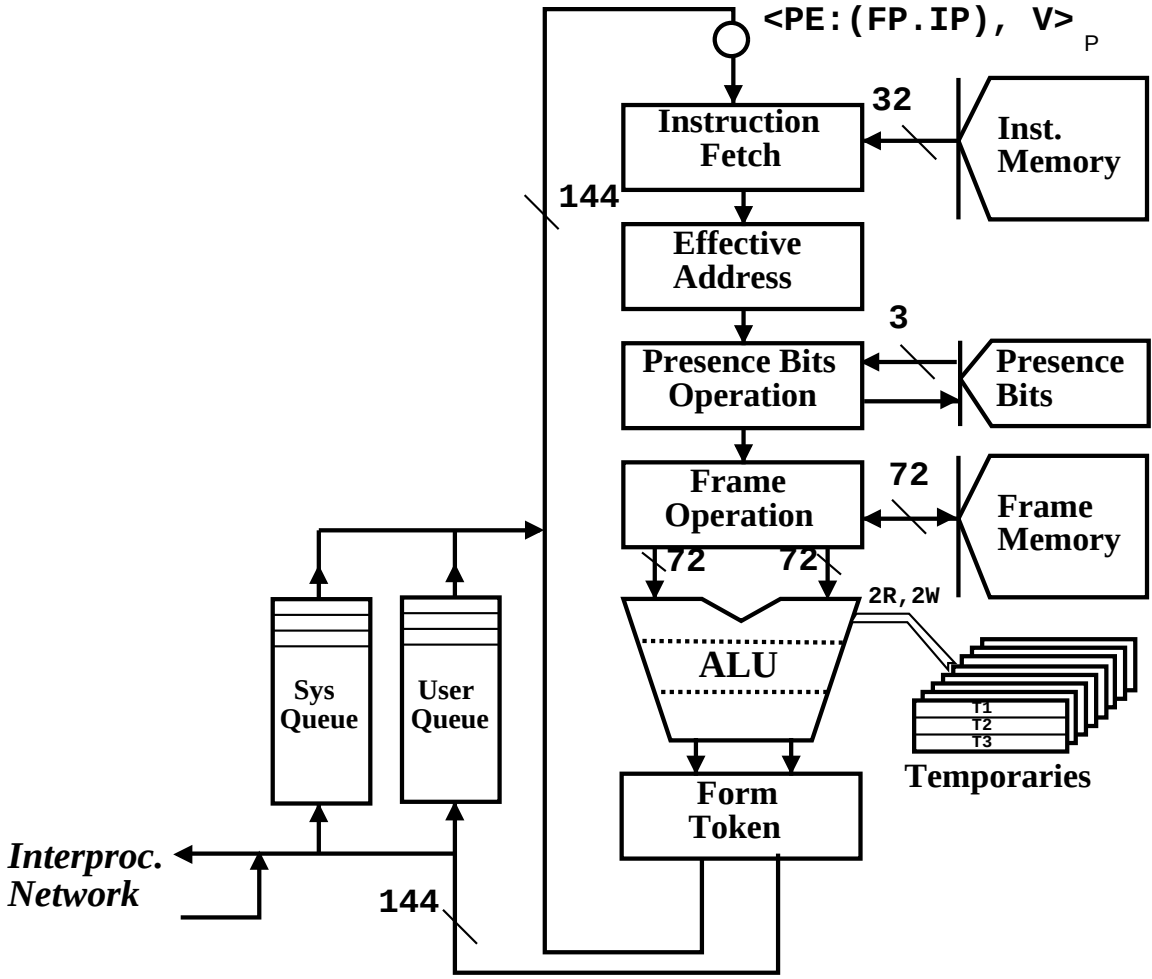
<PE:(FP.IP), V>
P
Instruction Fetch
32
Inst. Memory
144
Effective Address
3
Presence Bits Operation
Presence Bits
Frame Operation
72
Frame Memory
72
72
2R,2W
ALU
T1
T2
T3
Temporaries
Sys Queue
User Queue
Form Token
Interproc. Network
144