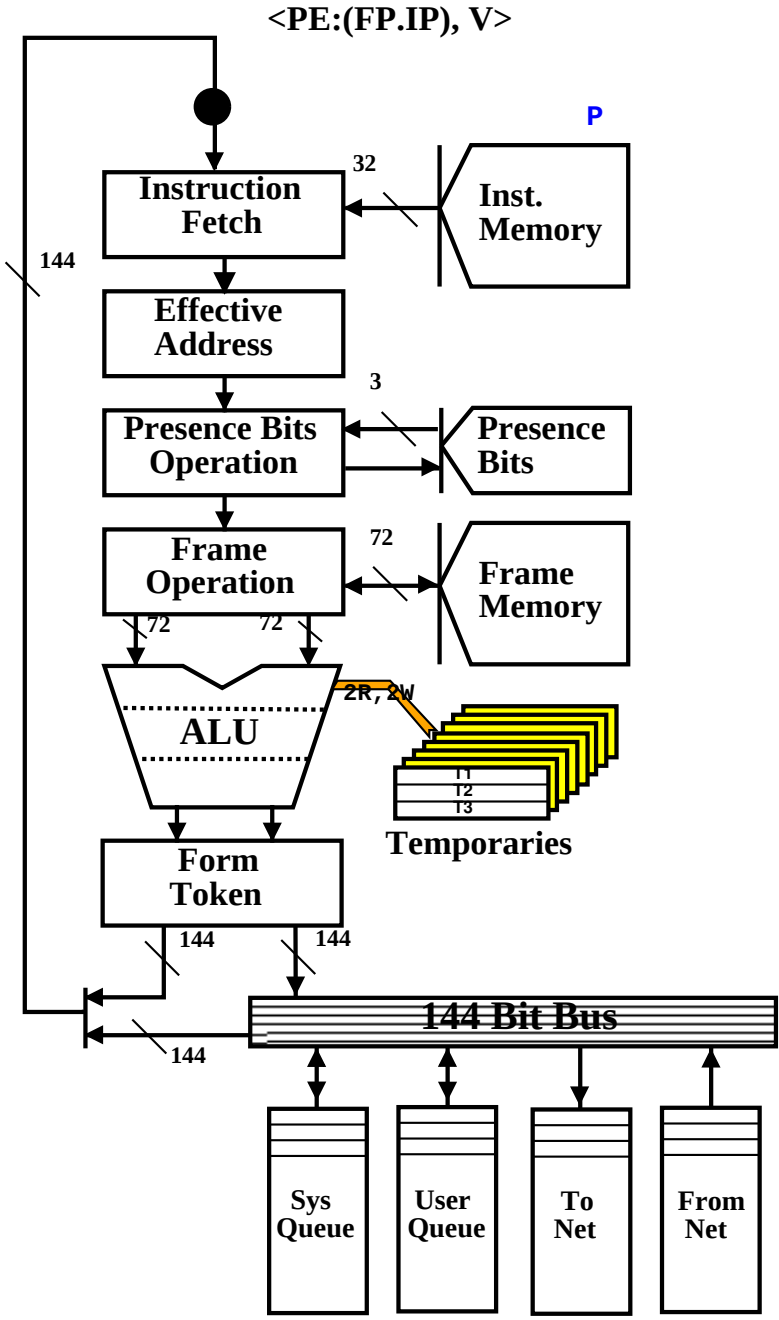
<PE:(FP.IP), V>
P
Instruction Fetch
32
Inst. Memory
144
Effective Address
3
Presence Bits Operation
Presence Bits
Frame Operation
72
Frame Memory
72
72
ALU
2R, 2W
T1
T2
T3
Temporaries
Form Token
144
144
144 Bit Bus
144
Sys Queue
User Queue
To Net
From Net