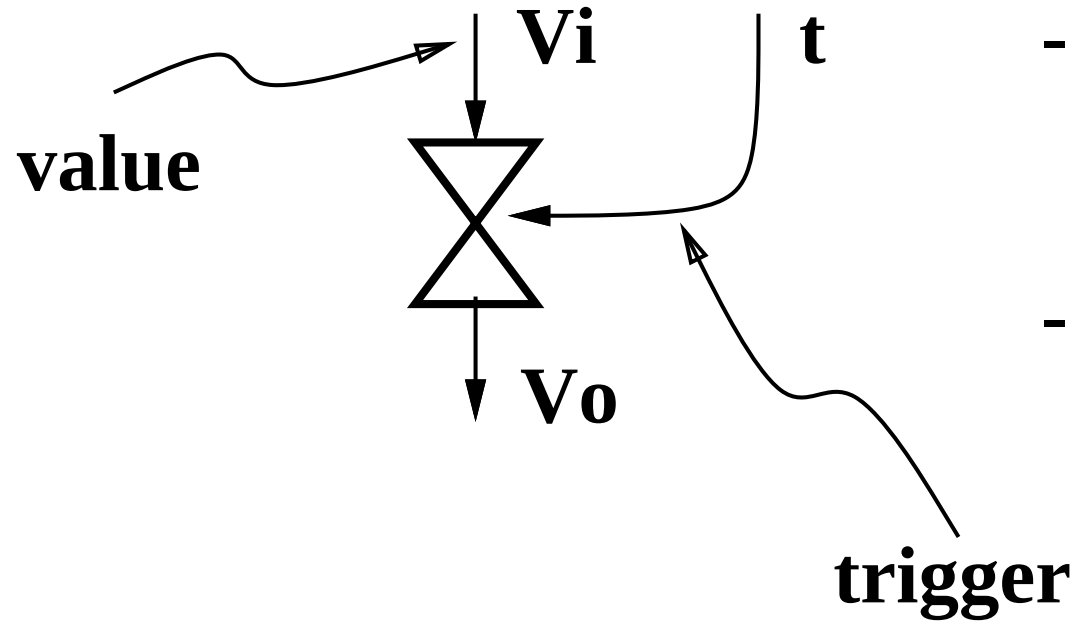


- Vo produced when both Vi and t have arrived.

- Vo gets value of Vi.