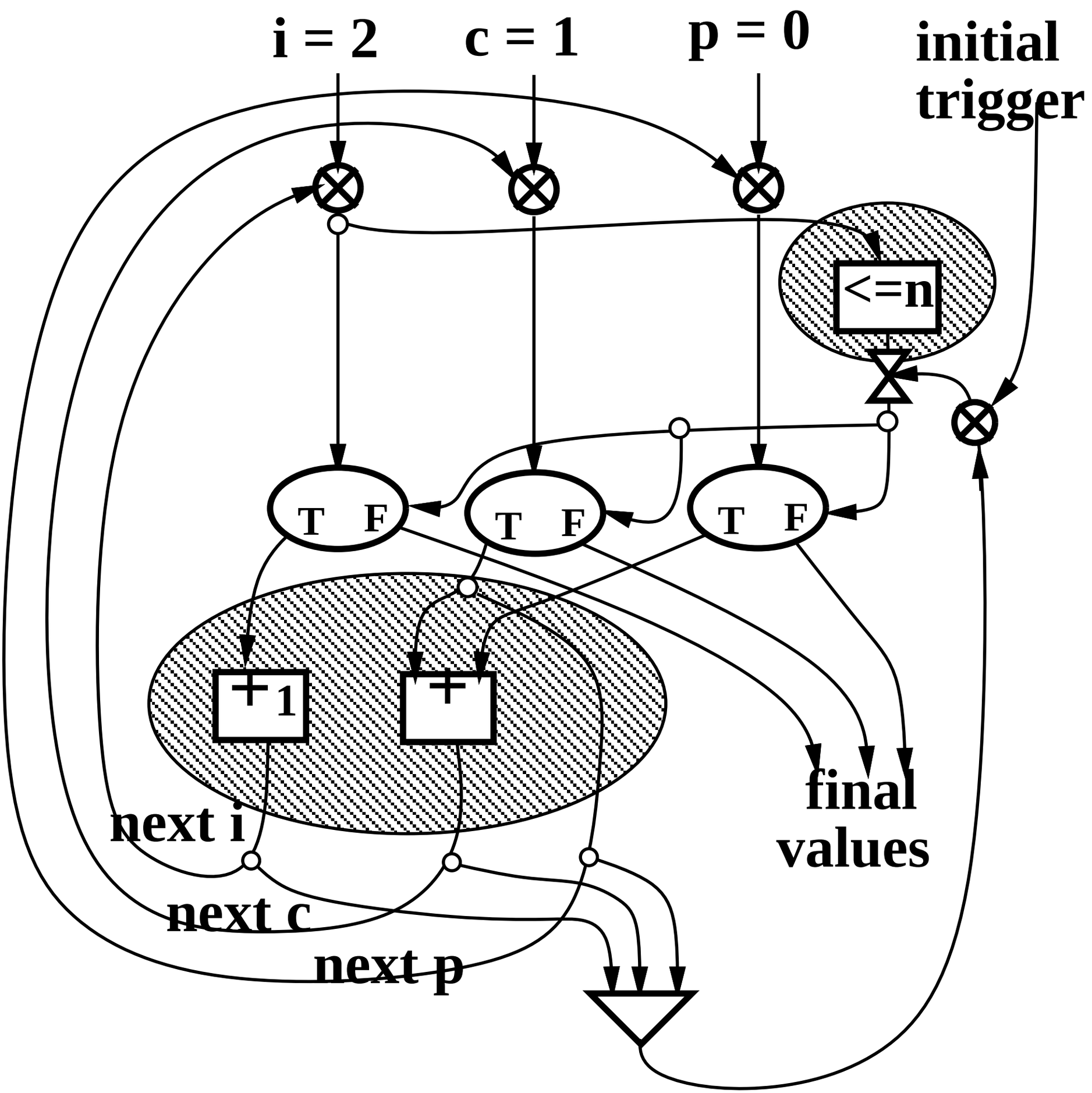
i = 2
c = 1
p = 0
initial trigger
<=n
T F
T F
T F
+1
+
next i
next c
next p
final values