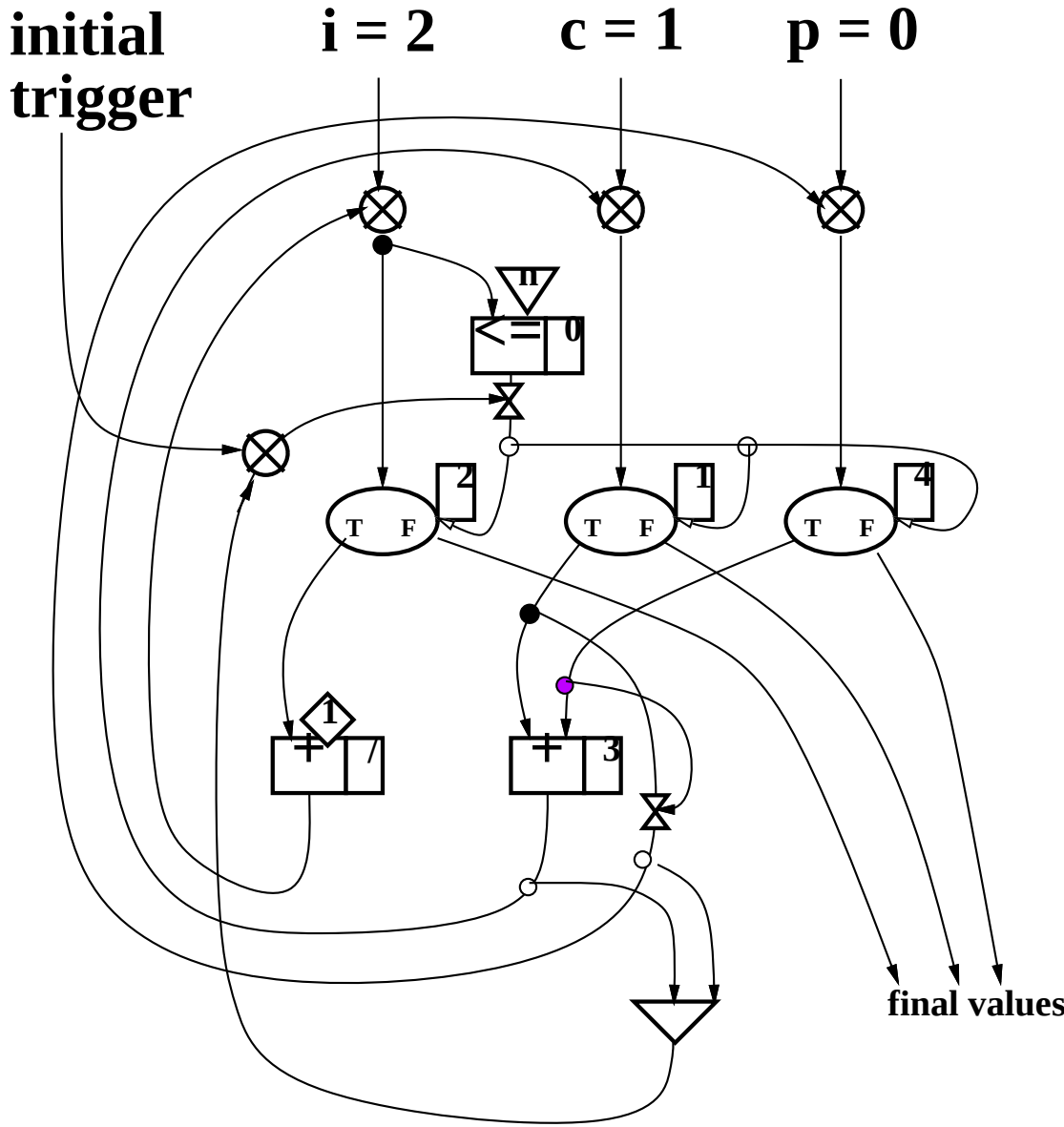
initial trigger
i = 2
c = 1
p = 0
n
<=
0
2
1
4
T F
T F
T F
1
+
/
+
3
final values