Matching and Frames

* **Requirements of matching:**

  (1) State information:
  - **whether left, right, or none of the operands have arrived.**

  (2) Place to store first operand to arrive.
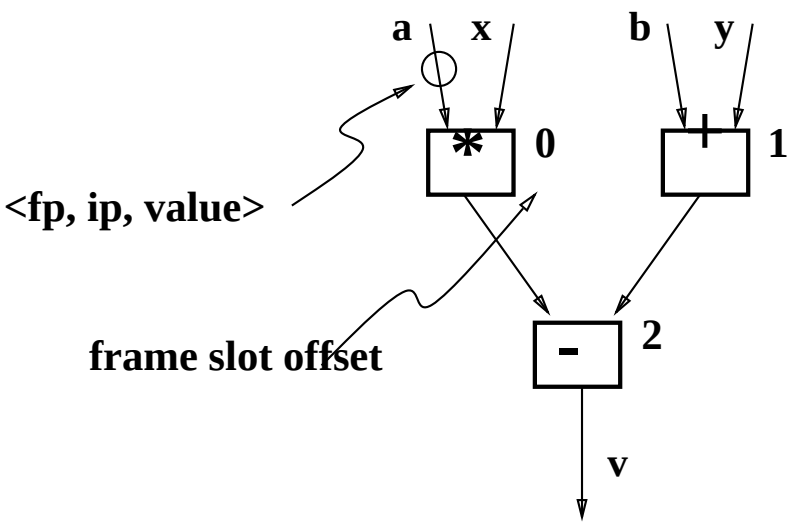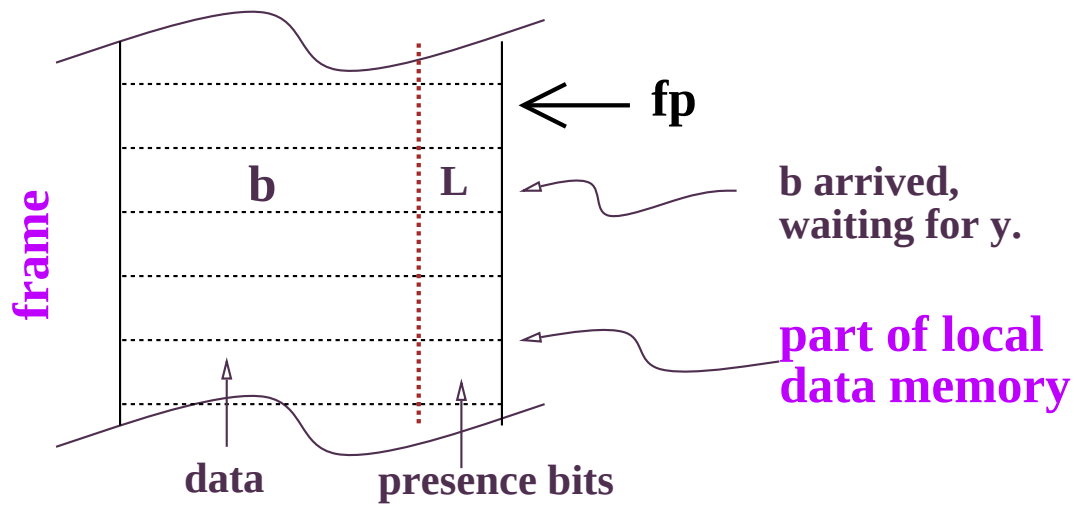
* **Solution on Monsoon:**