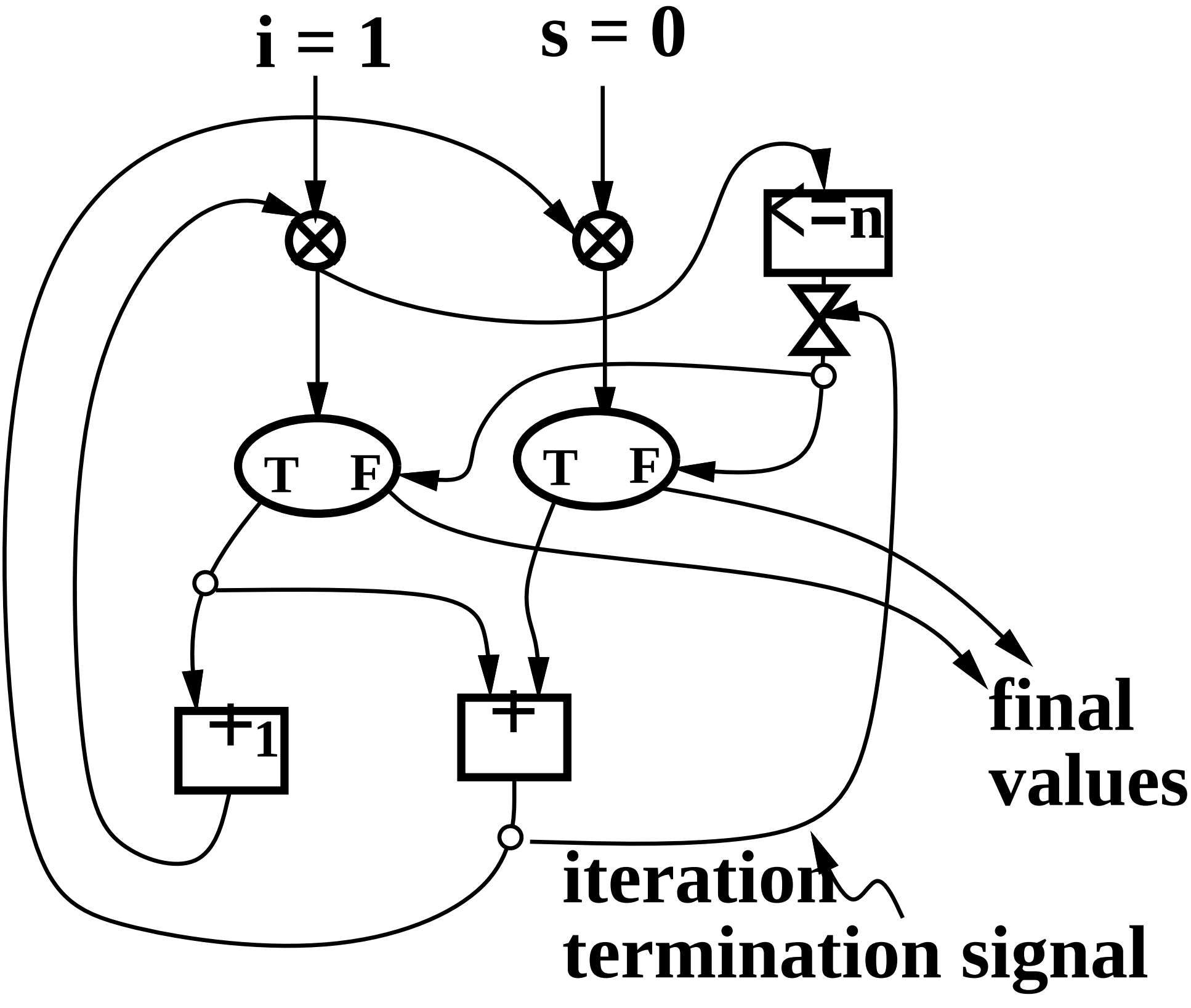
i = 1
s = 0
<−n
T F
T F
+1
+
final values
iteration termination signal