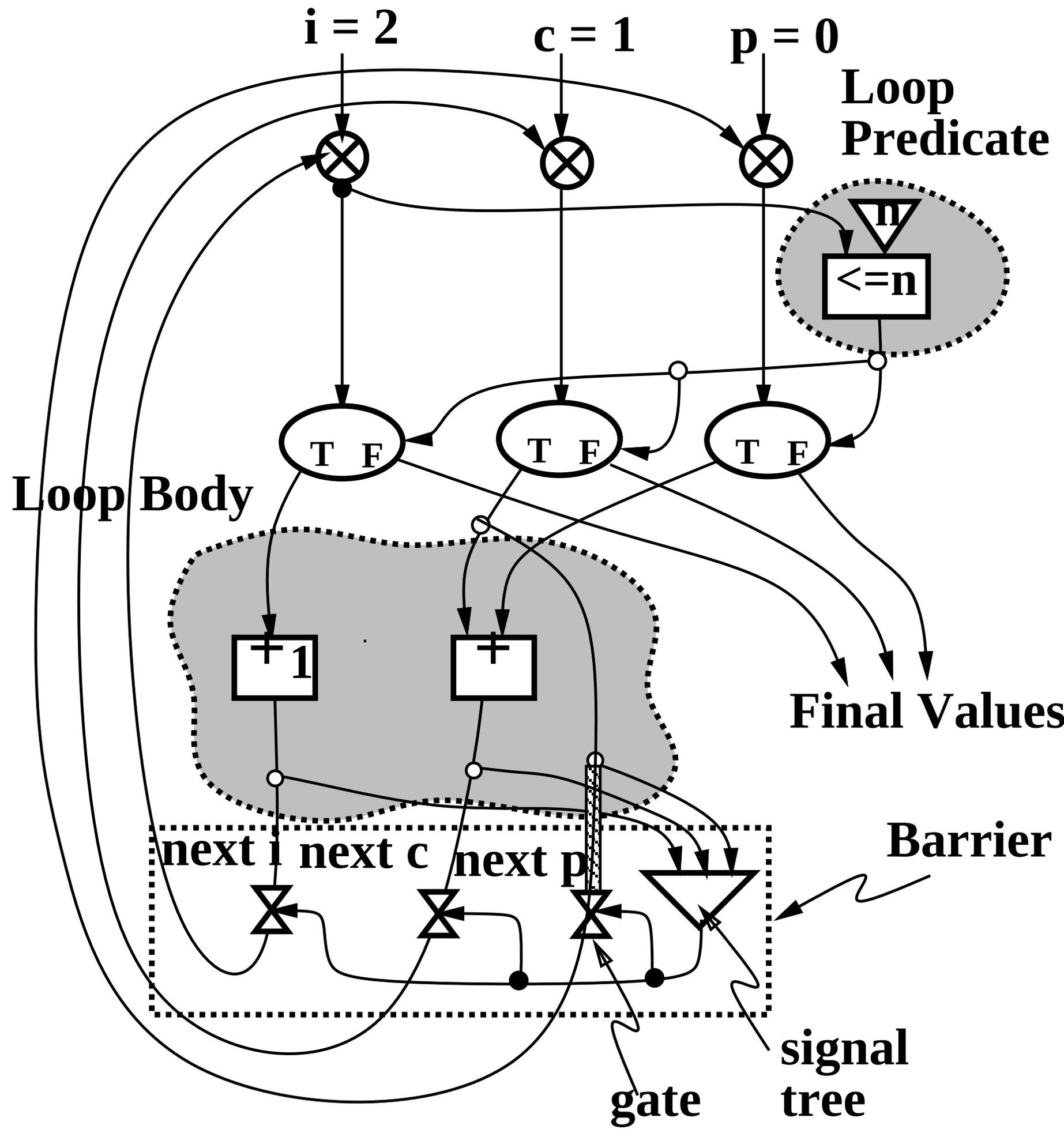
i = 2
c = 1
p = 0
Loop
Predicate
n
<=n
T F
T F
T F
Loop Body
+1
+
Final Values
next i
next c
next p
Barrier
gate
signal
tree