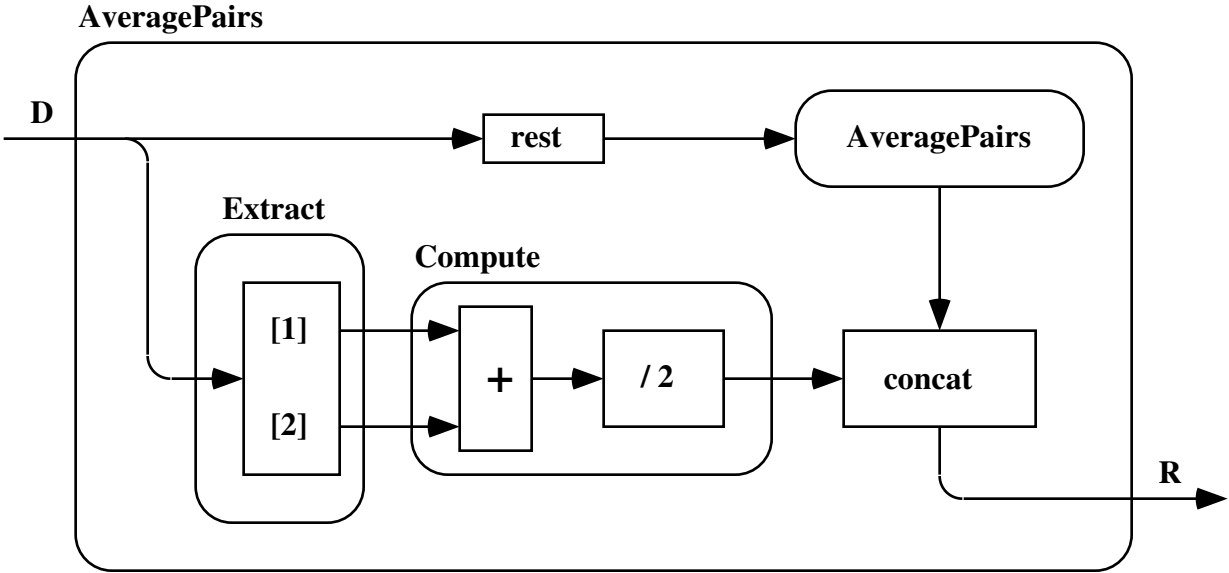
AveragePairs
D
rest
AveragePairs
Extract
[1]
[2]
Compute
+
/ 2
concat
R