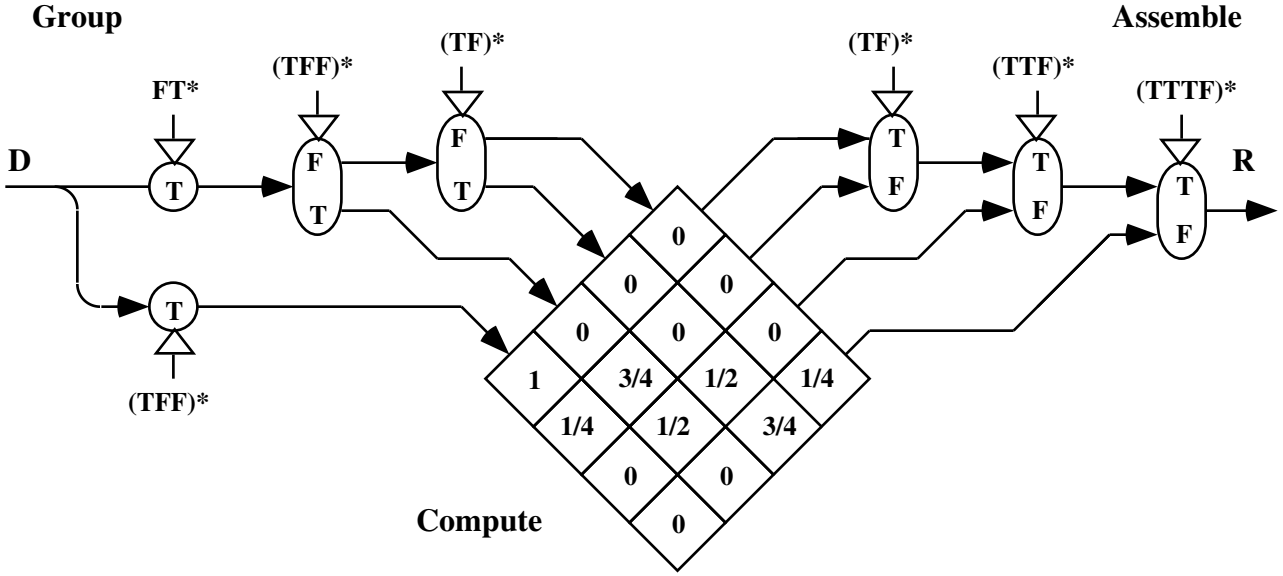
Group
Assemble
D
R
FT*
(TFF)*
(TF)*
(TF)*
(TTF)*
(TTTF)*
T
F
T
F
T
T
F
T
F
T
F
T
(TFF)*
0
0
0
0
0
0
1
3/4
1/2
1/4
1/4
1/2
3/4
0
0
0
Compute