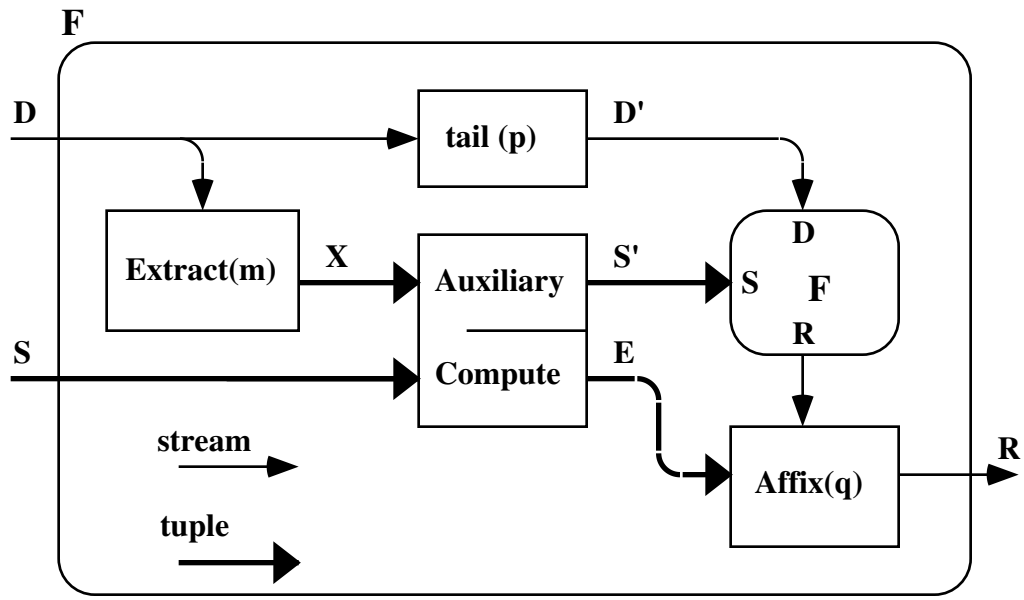
F
D
tail (p)
D'
Extract(m)
X
Auxiliary
Compute
S'
E
D
S
F
R
S
stream
tuple
Affix(q)
R