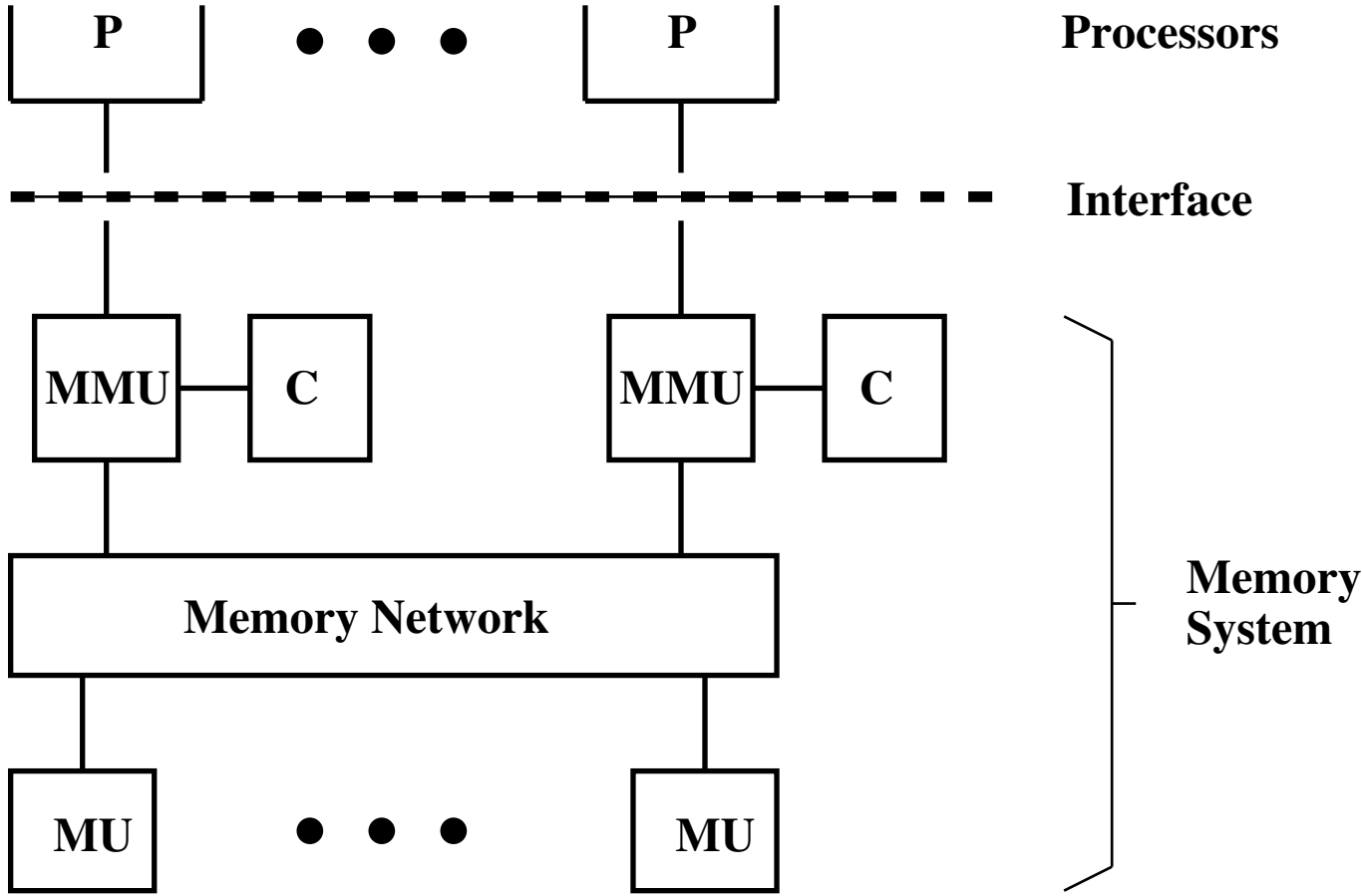
P
P
Processors
Interface
MMU
C
MMU
C
Memory Network
Memory System
MU
MU