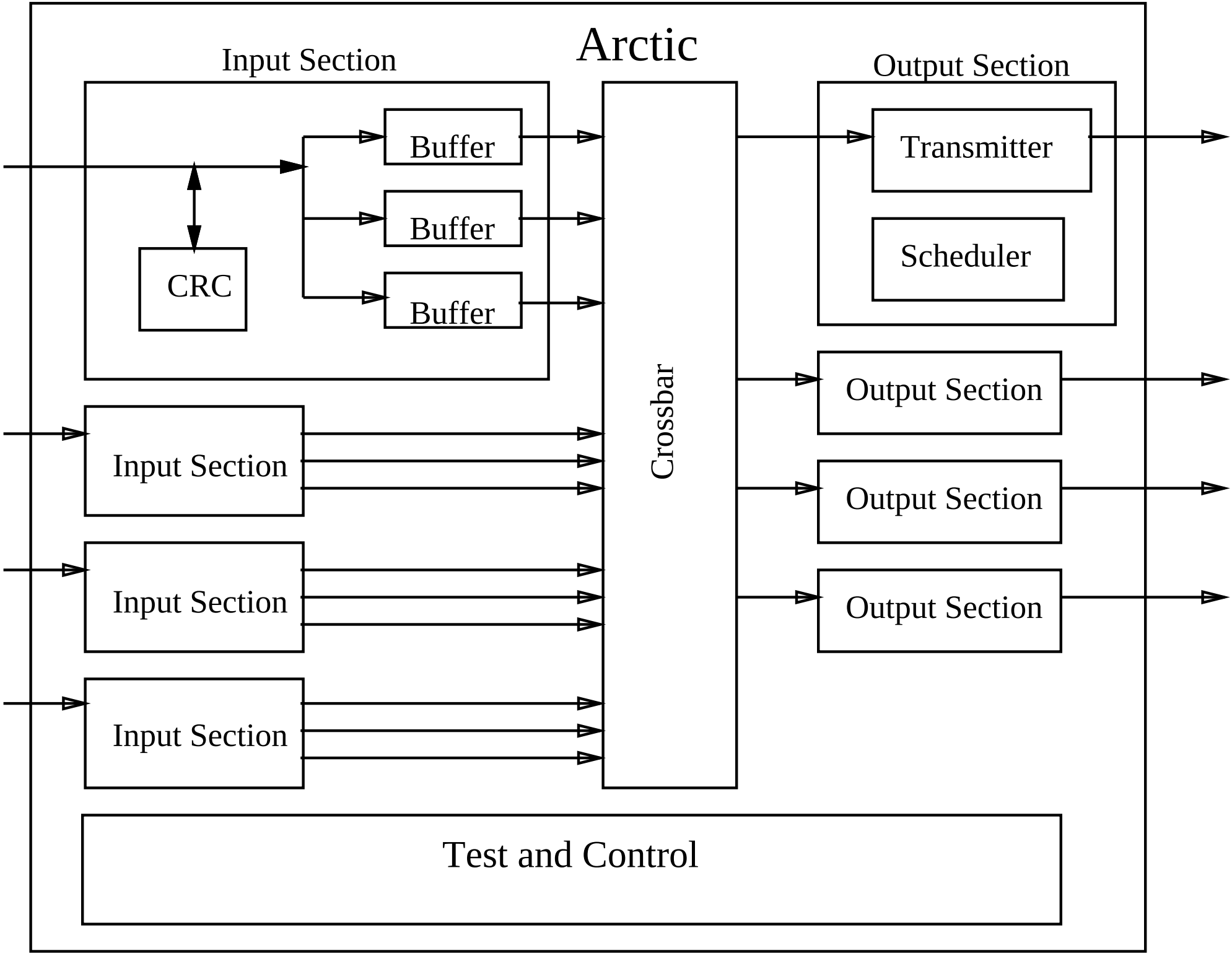
Arctic
Input Section
Buffer
Buffer
Buffer
CRC
Input Section
Input Section
Input Section
Crossbar
Output Section
Transmitter
Scheduler
Output Section
Output Section
Output Section
Test and Control