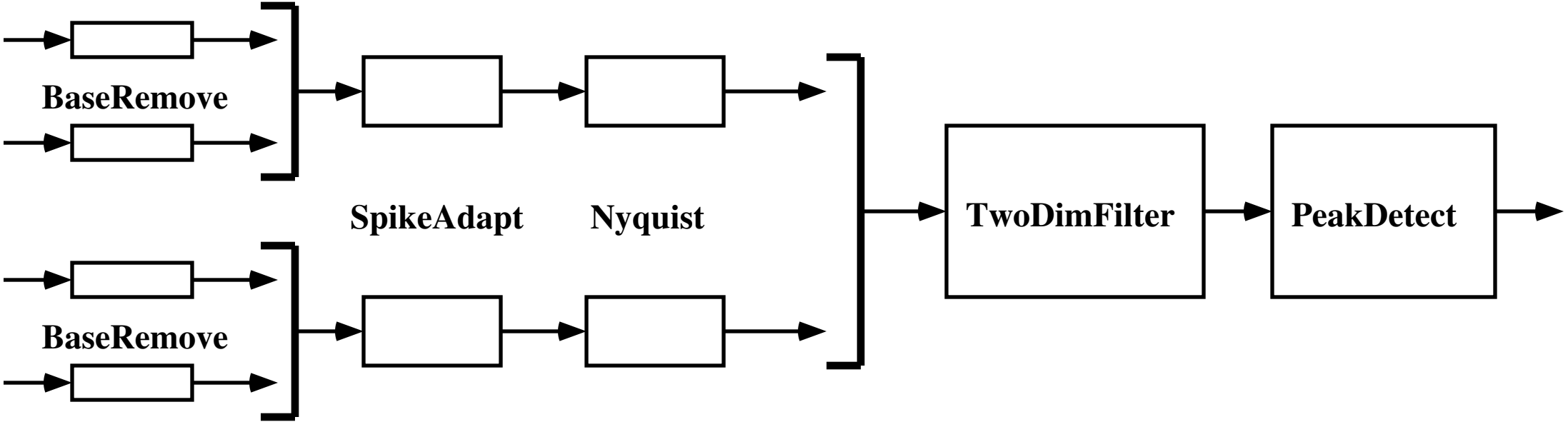
BaseRemove
BaseRemove
SpikeAdapt
Nyquist
TwoDimFilter
PeakDetect