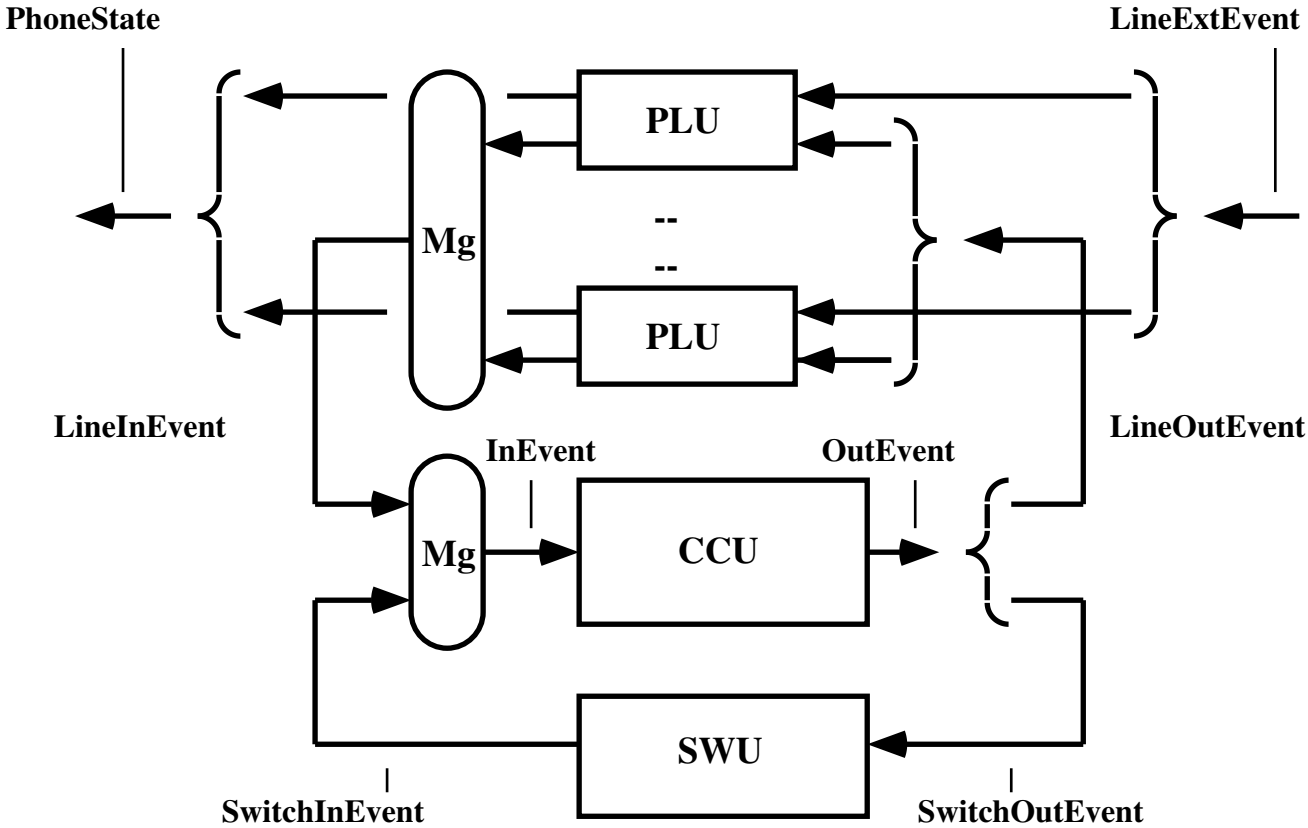

Mg - Nondeterminate Merge