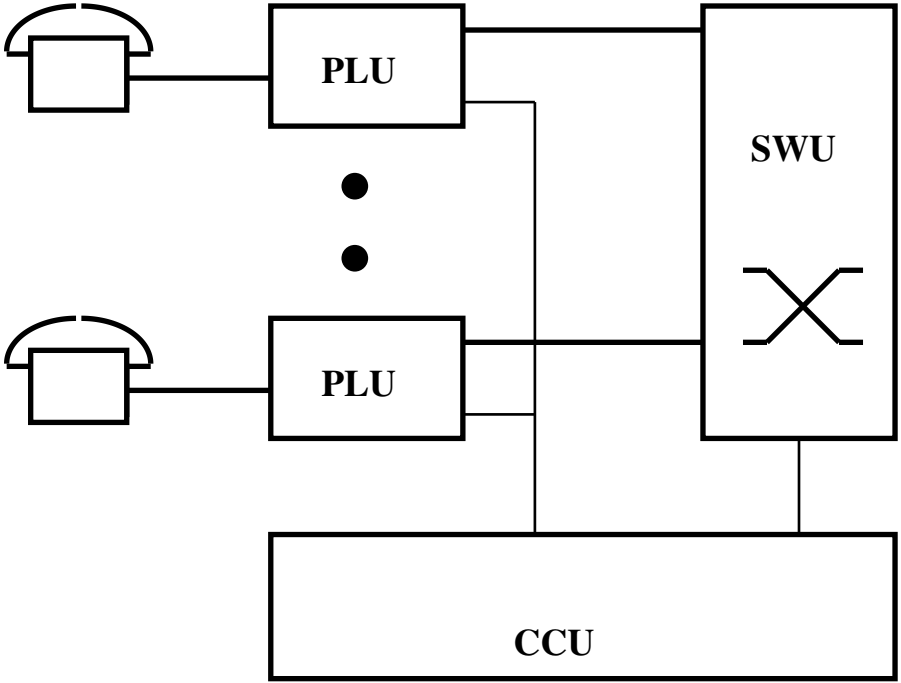

PLU - Phone Line Unit

SWU - Switching Unit

CCU - Common Control Unit