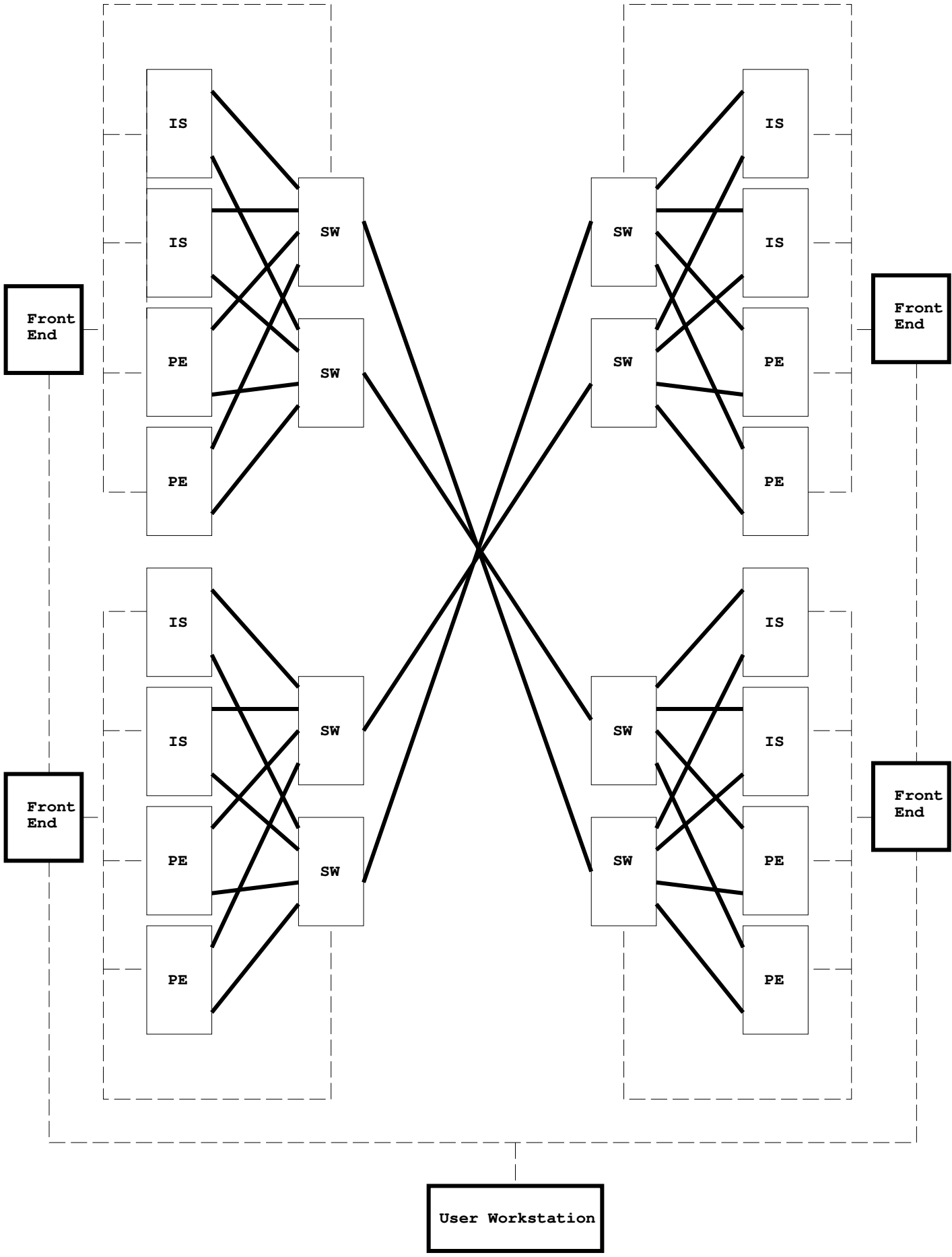
IS
IS
PE
PE
SW
SW
SW
SW
IS
IS
PE
PE
Front End
Front End
IS
IS
PE
PE
SW
SW
SW
SW
IS
IS
PE
PE
Front End
Front End
User Workstation