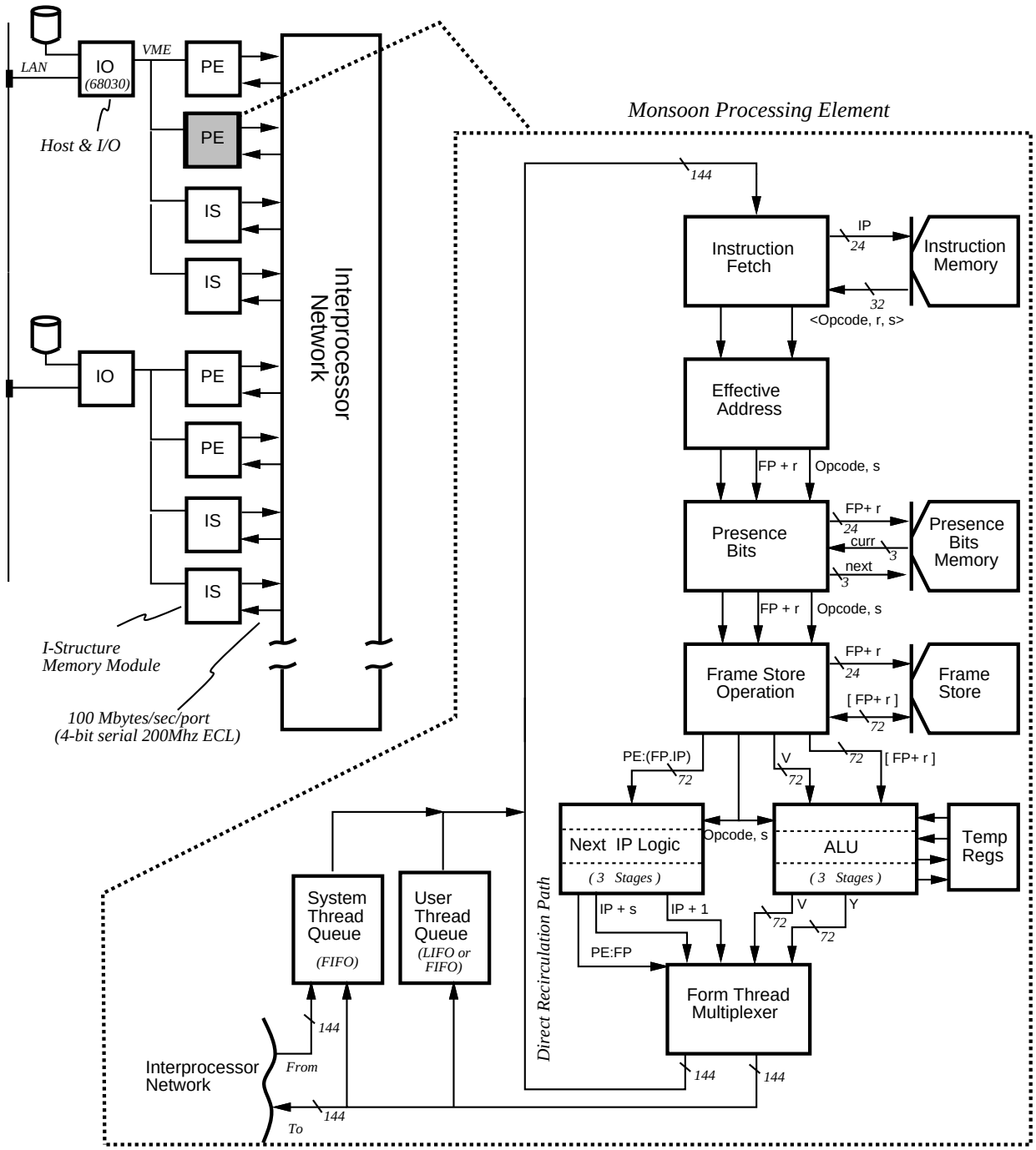
LAN
IO
(68030)
VME
PE
PE
IS
IS
Host & I/O
IO
PE
PE
IS
IS
I-Structure
Memory Module
100 Mbytes/sec/port
(4-bit serial 200Mhz ECL)
Interprocessor
Network
Monsoon Processing Element
144
Instruction
Fetch
IP
24
Instruction
Memory
32
<Opcode, r, s>
Effective
Address
FP + r
Opcode, s
Presence
Bits
FP+ r
24
curr
3
next
3
Presence
Bits
Memory
FP + r
Opcode, s
Frame Store
Operation
FP+ r
24
[ FP+ r ]
72
Frame
Store
PE:(FP.IP)
72
V
72
72
[ FP+ r ]
Next IP Logic
( 3 Stages )
Opcode, s
ALU
( 3 Stages )
Temp
Regs
IP + s
IP + 1
V
72
Y
72
PE:FP
Form Thread
Multiplexer
Direct Recirculation Path
System
Thread
Queue
(FIFO)
User
Thread
Queue
(LIFO or
FIFO)
144
Interprocessor
Network
From
144
To
144
144