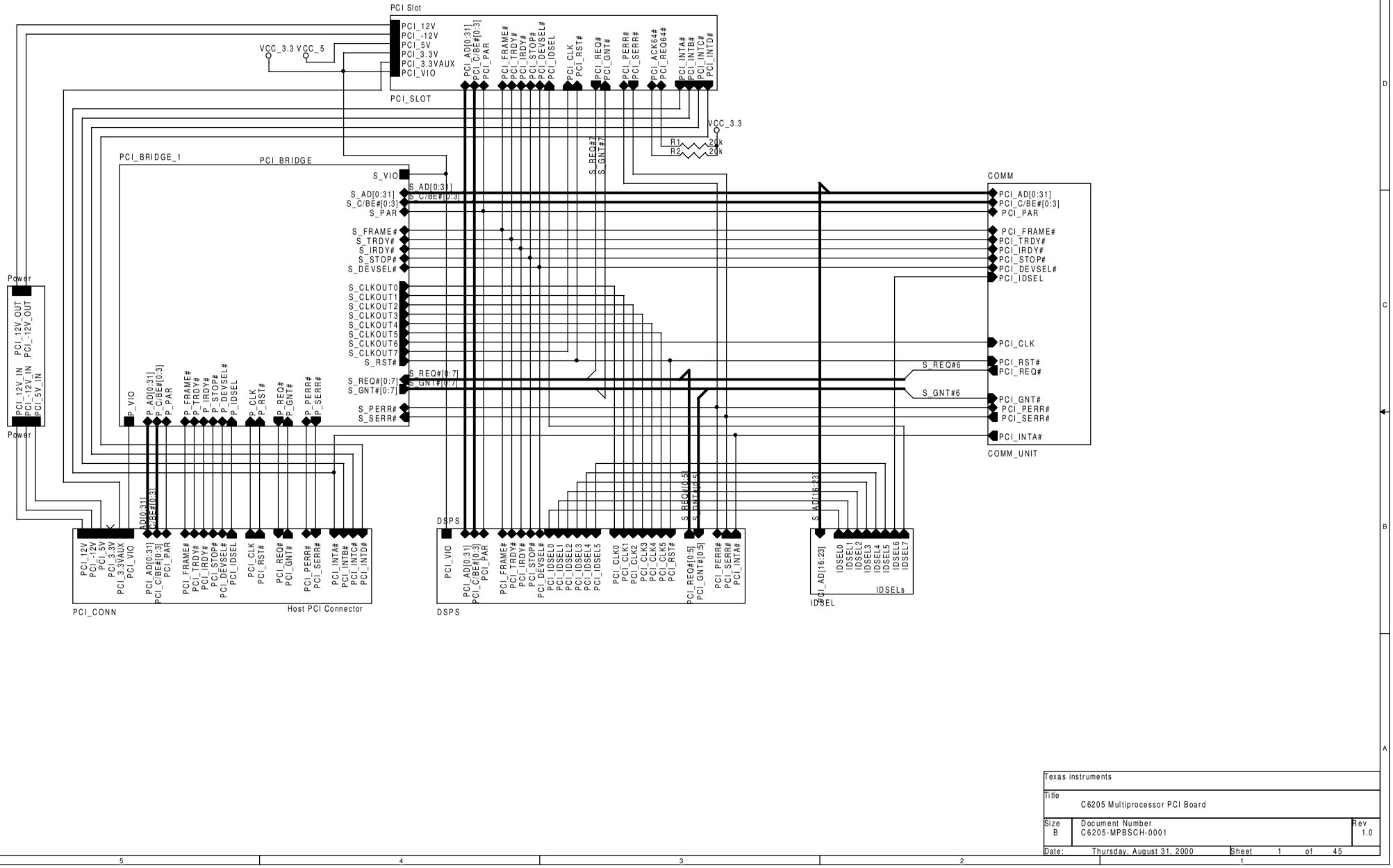

Texas instruments		
Title: C6205 Multiprocessor PCI Board		
Size: B	Document Number: C6205-MPBSCH-0001	Rev: 1.0
Date: Thursday, August 31, 2000	Sheet 1 of 45	

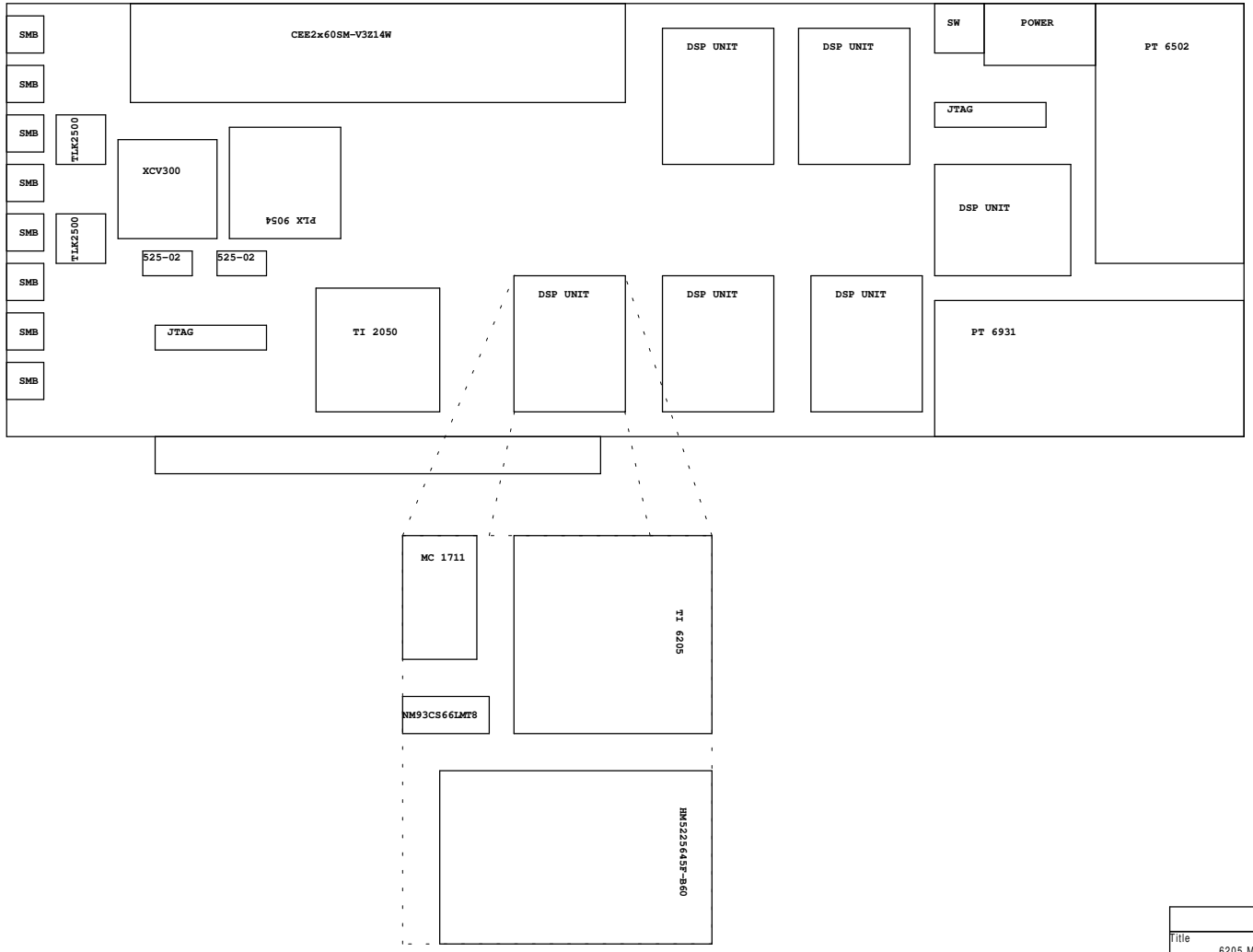

Title	6205 Multiproc Board Major Component Placement	
Size: B	Document Number: C6205-MPBSCH-0001	Rev: 1.0
Date: Wednesday, September 13, 2000	Sheet 1 of 1	

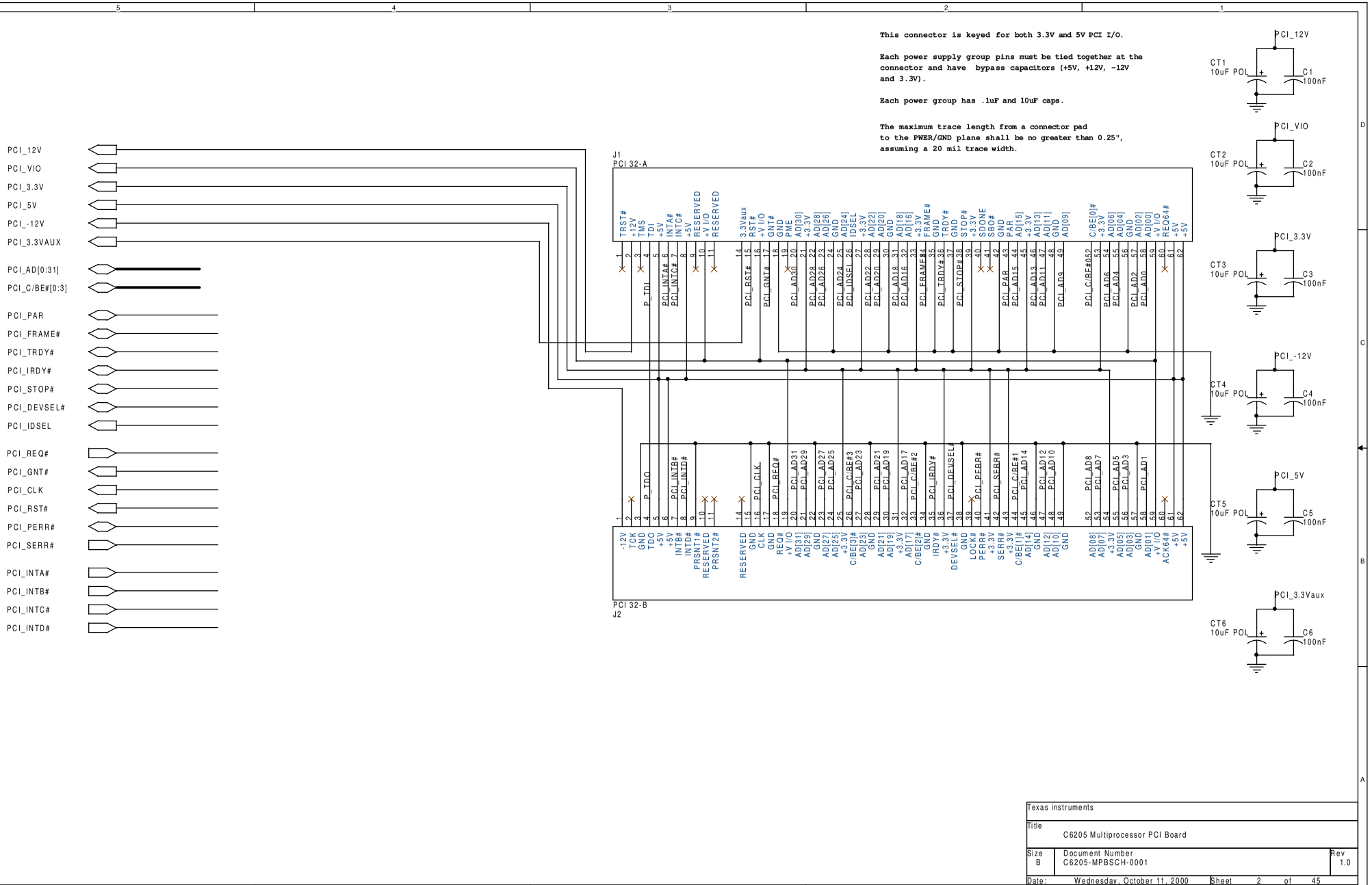

Texas instruments		
Title: C6205 Multiprocessor PCI Board		
Size: B	Document Number: C6205-MPBSCH-0001	Rev: 1.0
Date: Wednesday, October 11, 2000	Sheet 2 of 45	

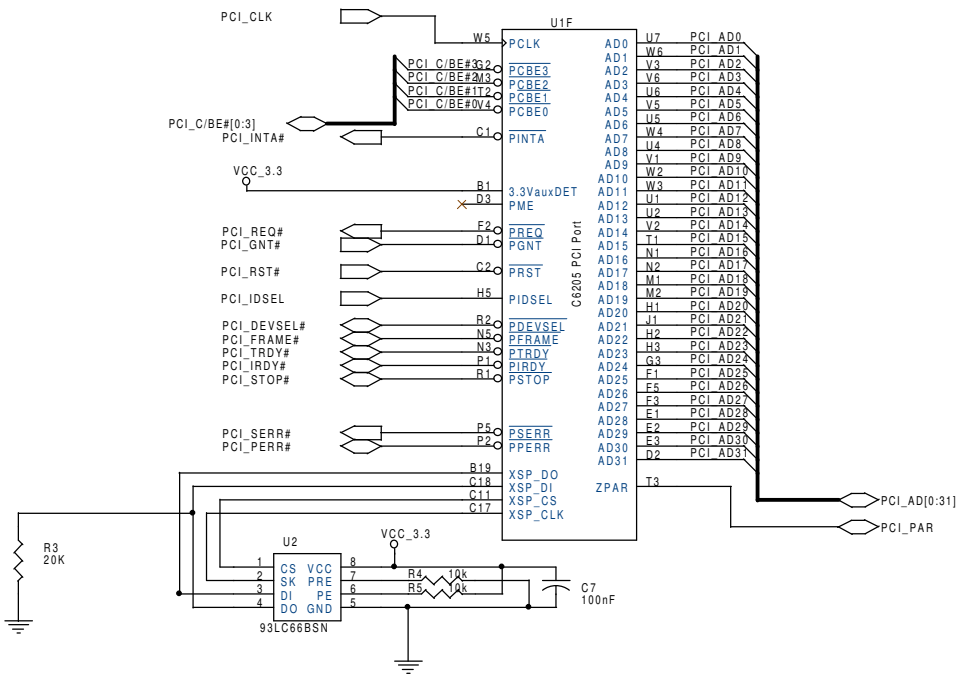

Texas instruments		
Title: C6205 Multiprocessor PCI Board		
Size: B	Document Number: C6205-MPBSCH-0001	Rev: 1.0
Date: Tuesday, January 23, 2001	Sheet 3 of 45	

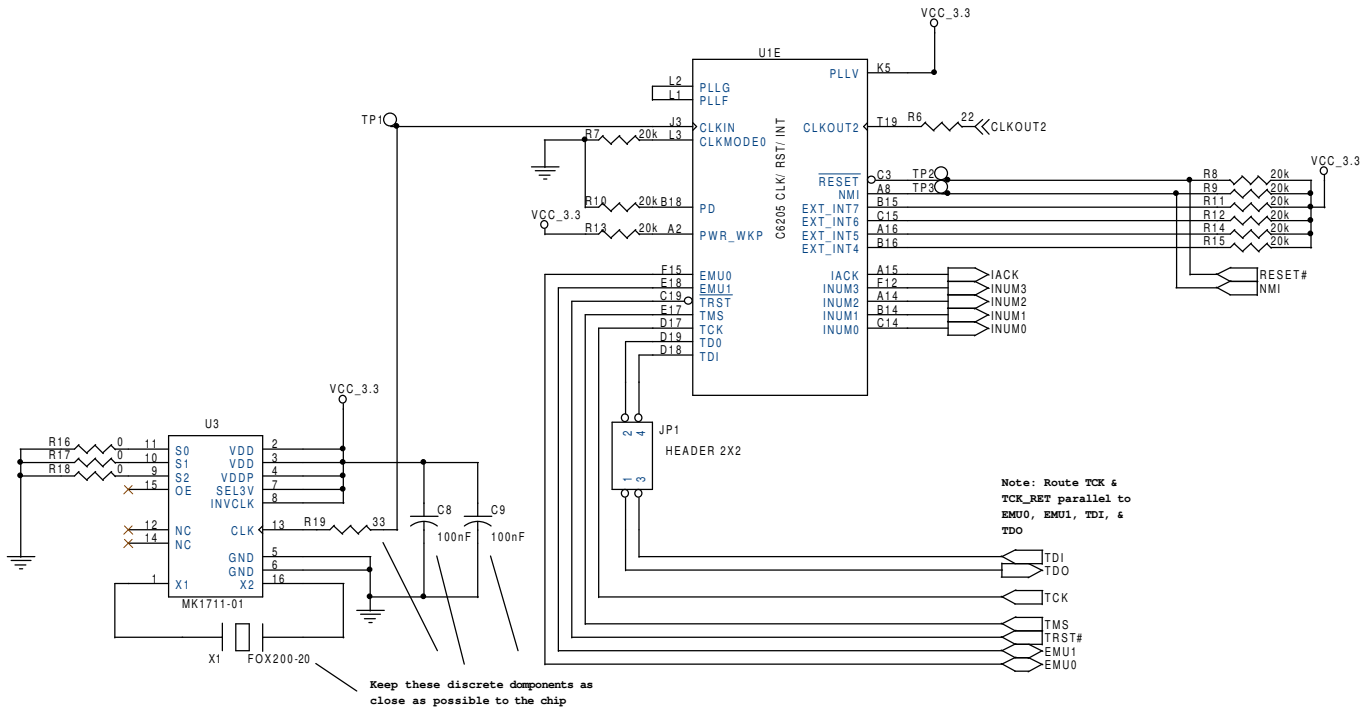

Texas instruments		
Title: C6205 Multiprocessor PCI Board		
Size: B	Document Number: C6205-MPBSCH-0001	Rev: 1.0
Date: Tuesday, January 23, 2001	Sheet 4 of 45	

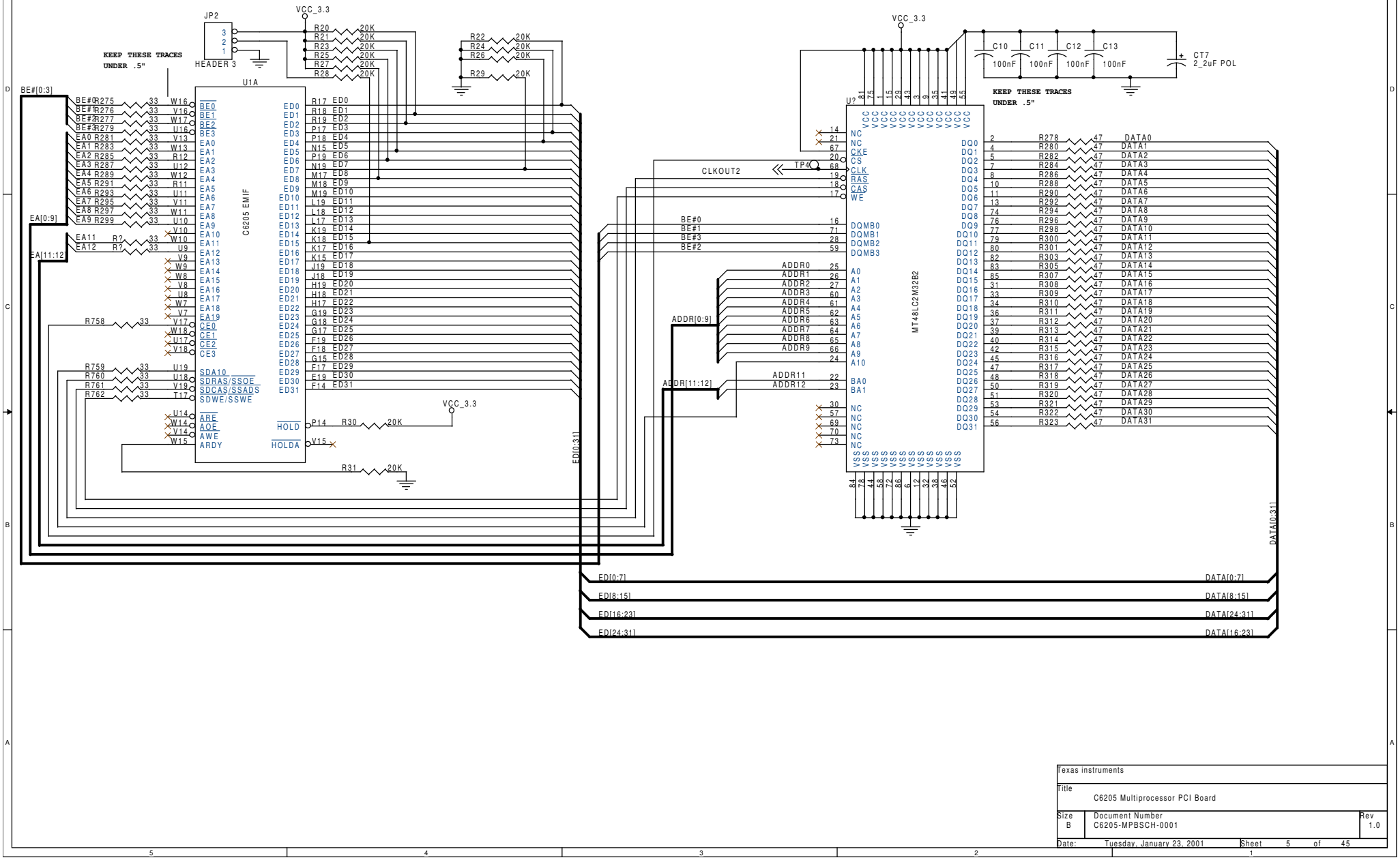

Texas instruments			
Title	C6205 Multiprocessor PCI Board		
Size B	Document Number C6205-MPBSCH-0001		Rev 1.0
Date: Tuesday, January 23, 2001	Sheet 5 of 45		

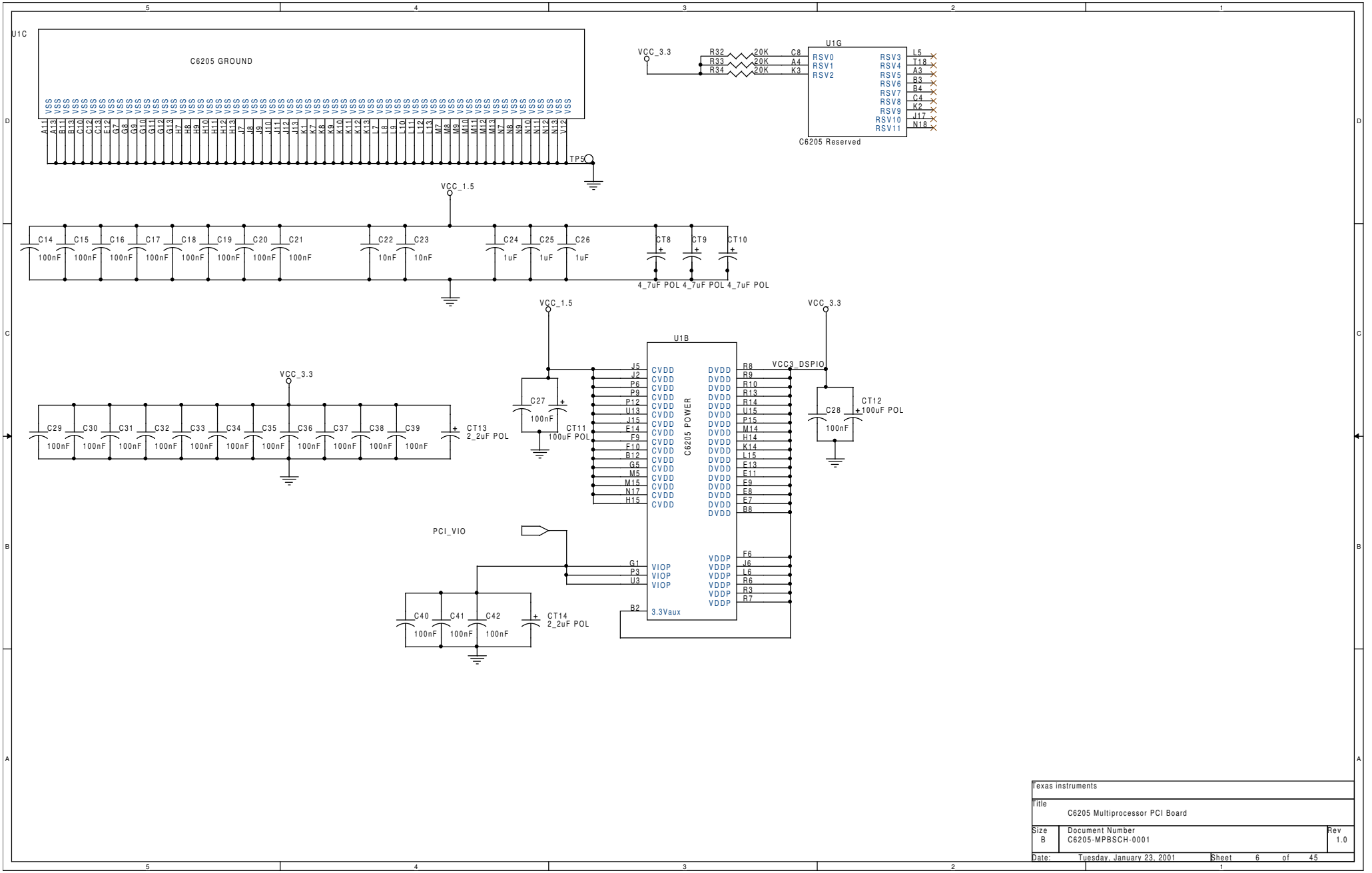

Texas instruments		
Title: C6205 Multiprocessor PCI Board		
Size: B	Document Number: C6205-MPBSCH-0001	Rev: 1.0
Date: Tuesday, January 23, 2001	Sheet 6 of 45	

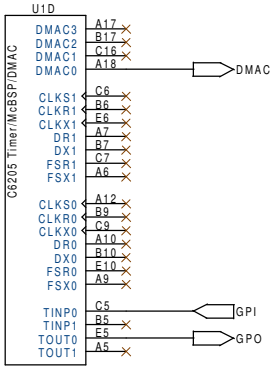

Texas instruments		
Title: C6205 Multiprocessor PCI Board		
Size: B	Document Number: C6205-MPBSCH-0001	Rev: 1.0
Date: Tuesday, January 23, 2001	Sheet 7 of 45	

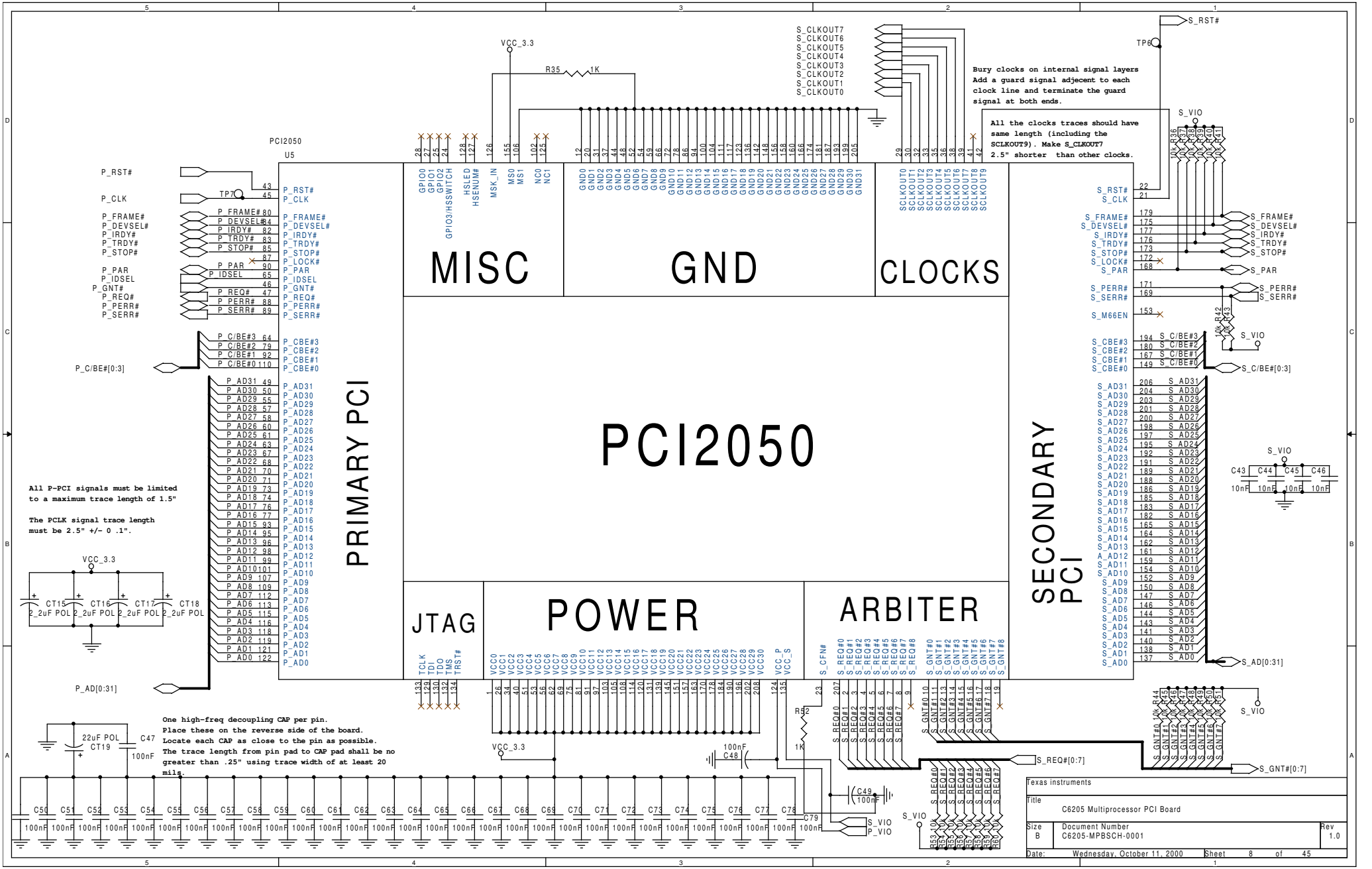
PCI2050
U5
PRIMARY PCI
MISC
GND
CLOCKS
PCI2050
SECONDARY PCI
JTAG
POWER
ARBITER
Bury clocks on internal signal layers
Add a guard signal adjecent to each
clock line and terminate the guard
signal at both ends.
All the clocks traces should have
same length (including the
SCLKOUT9). Make S_CLKOUT7
2.5" shorter than other clocks.
All P-PCI signals must be limited
to a maximum trace length of 1.5"
The PCLK signal trace length
must be 2.5" +/- 0 .1".
One high-freq decoupling CAP per pin.
Place these on the reverse side of the board.
Locate each CAP as close to the pin as possible.
The trace length from pin pad to CAP pad shall be no
greater than .25" using trace width of at least 20
mils.
VCC_3.3
R35 1K
S_RST#
TP6
S_VIO
P_RST#
P_CLK
P_FRAME#
P_DEVSEL#
P_IRDY#
P_TRDY#
P_STOP#
P_PAR
P_IDSEL
P_GNT#
P_REQ#
P_PERR#
P_SERR#
P_C/BE#[0:3]
P_AD[0:31]
S_FRAME#
S_DEVSEL#
S_IRDY#
S_TRDY#
S_STOP#
S_LOCK#
S_PAR
S_PERR#
S_SERR#
S_M66EN
S_C/BE#[0:3]
S_AD[0:31]
S_REQ#[0:7]
S_GNT#[0:7]
C43 C44 C45 C46
10nF
CT15 CT16 CT17 CT18
2_2uF POL
22uF POL
CT19
C47
100nF
C48
R52
1K
C49
100nF
C79
S_VIO
P_VIO
Texas instruments
Title
C6205 Multiprocessor PCI Board
Size
B
Document Number
C6205-MPBSCH-0001
Rev
1.0
Date: Wednesday, October 11, 2000
Sheet 8 of 45

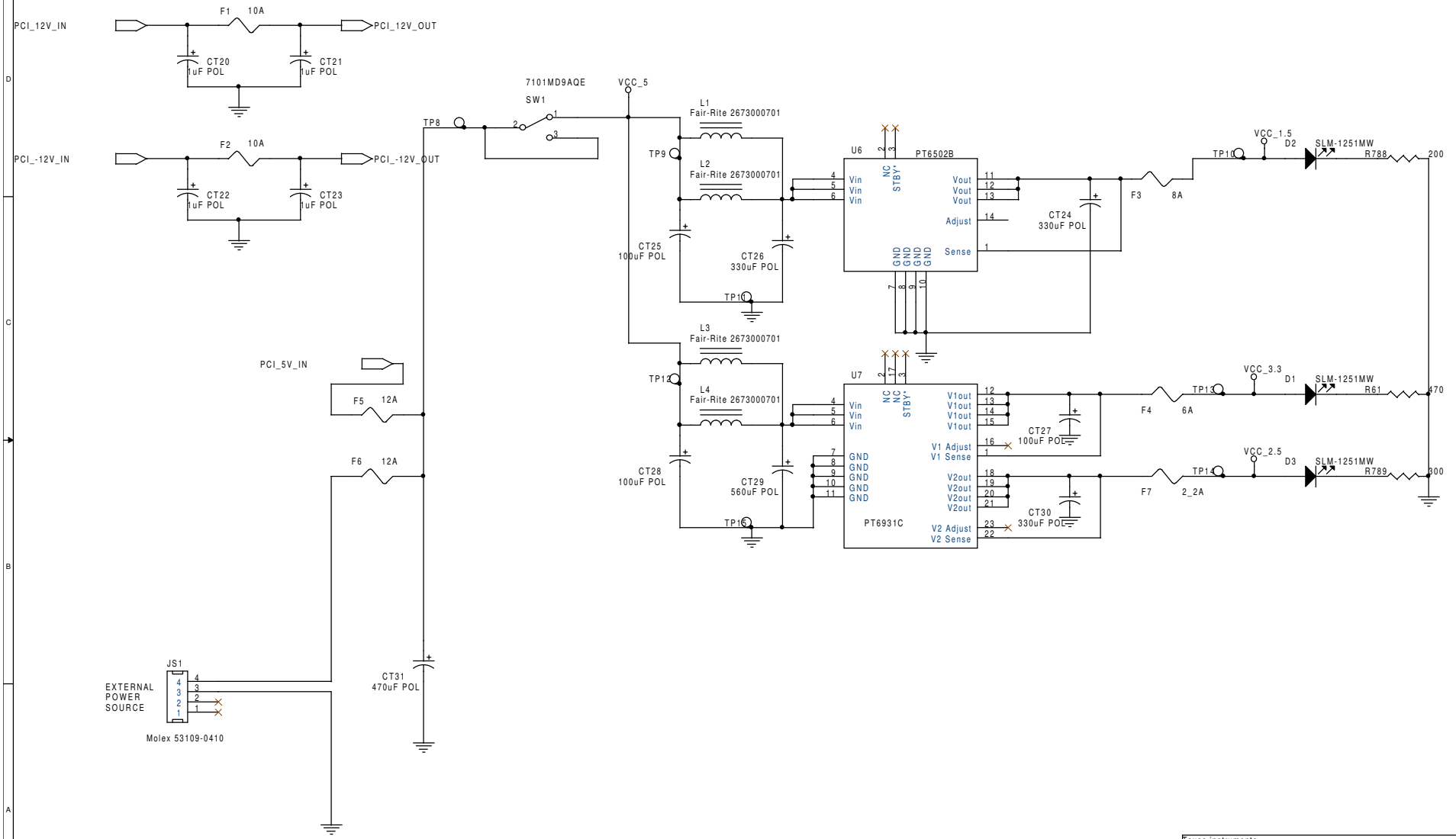

Texas instruments		
Title: C6205 Multiprocessor PCI Board		
Size: B	Document Number: C6205-MPBSCH-0001	Rev: 1.0
Date: Thursday, October 05, 2000	Sheet 9 of 45	

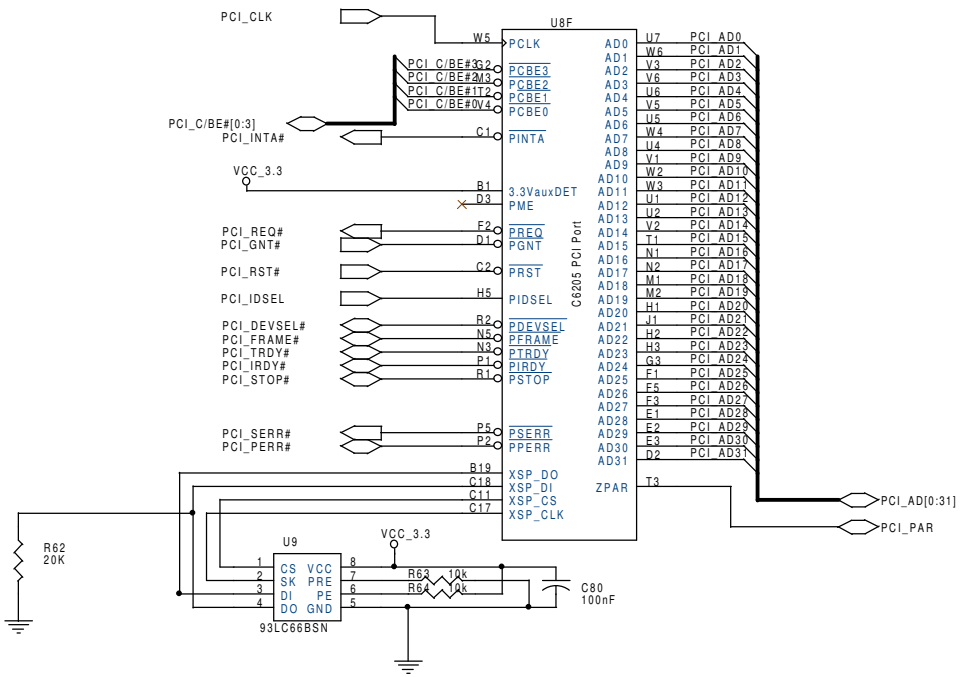

Texas instruments		
Title: C6205 Multiprocessor PCI Board		
Size: B	Document Number: C6205-MPBSCH-0001	Rev: 1.0
Date: Tuesday, January 23, 2001	Sheet 10 of 45	

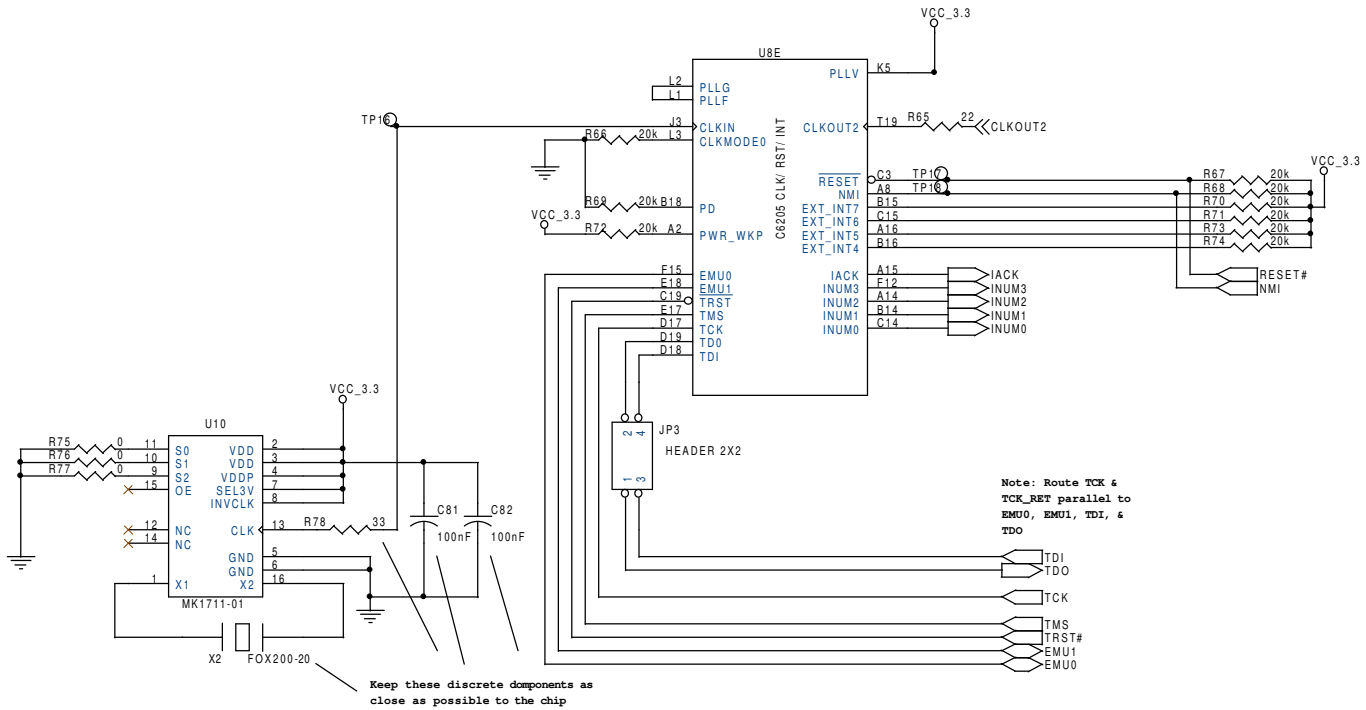

Texas instruments		
Title: C6205 Multiprocessor PCI Board		
Size: B	Document Number: C6205-MPBSCH-0001	Rev: 1.0
Date: Tuesday, January 23, 2001	Sheet 11 of 45	

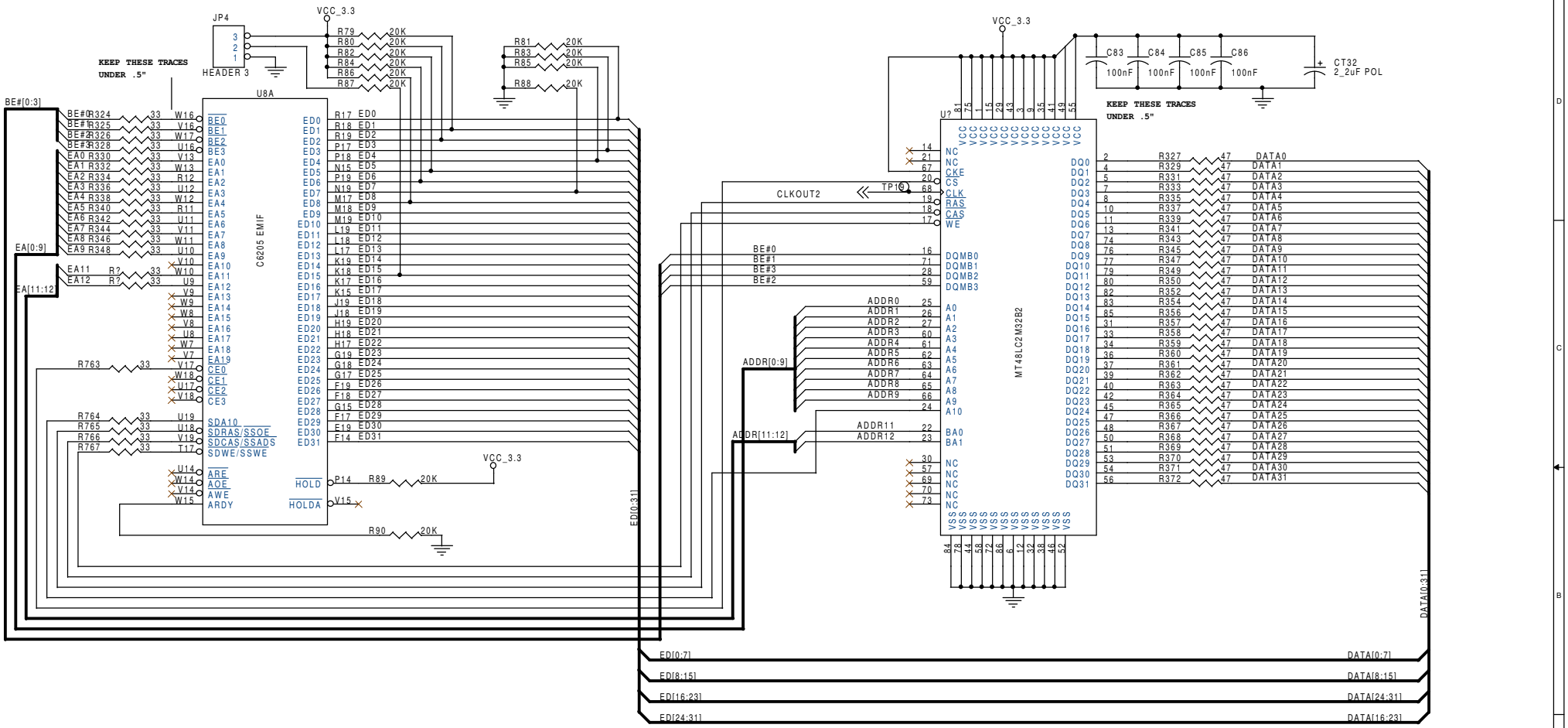

Texas instruments		
Title: C6205 Multiprocessor PCI Board		
Size: B	Document Number: C6205-MPBSCH-0001	Rev: 1.0
Date: Tuesday, January 23, 2001	Sheet 12 of 45	

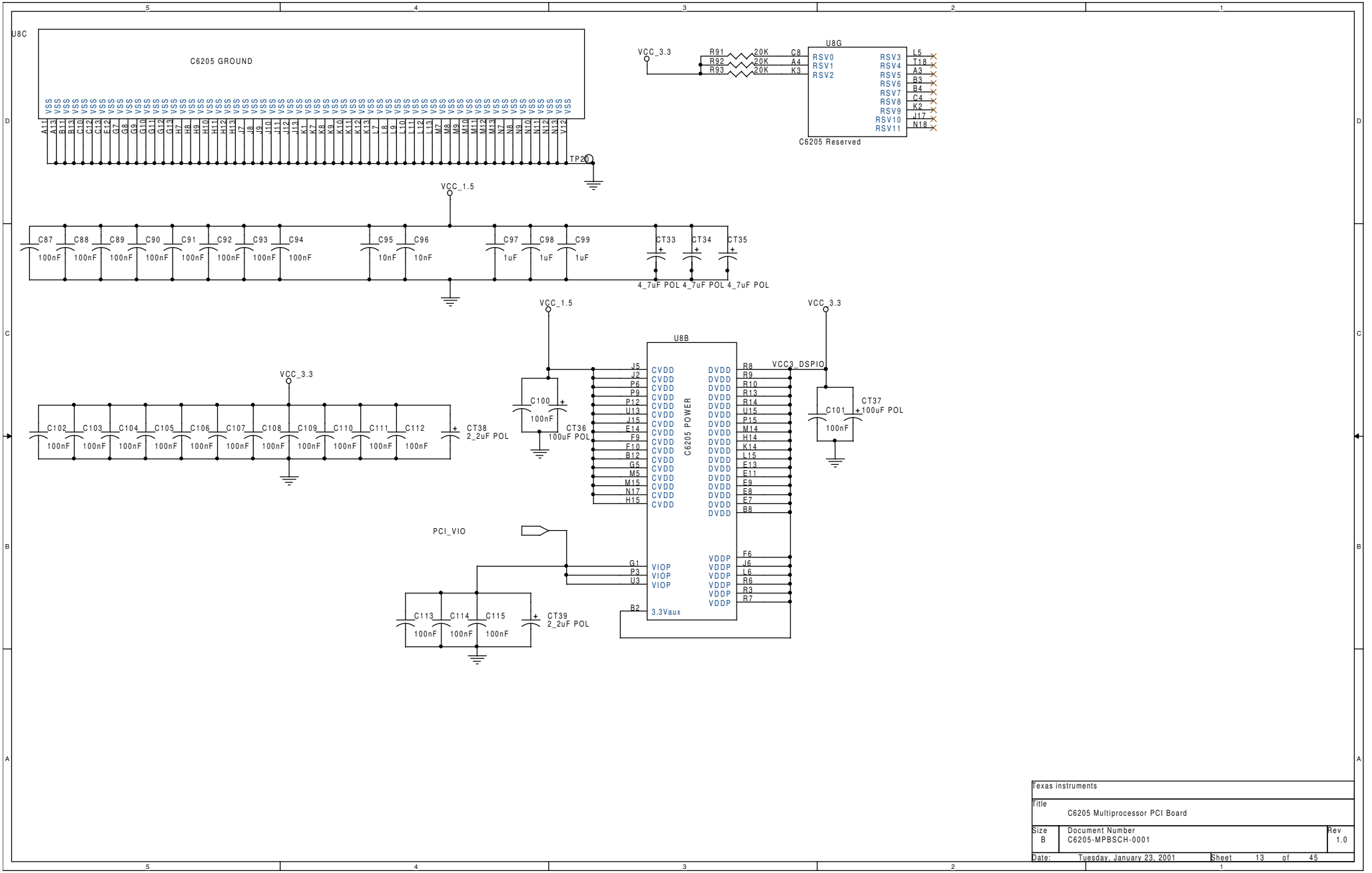

Texas instruments		
Title: C6205 Multiprocessor PCI Board		
Size: B	Document Number: C6205-MPBSCH-0001	Rev: 1.0
Date: Tuesday, January 23, 2001	Sheet 13 of 45	

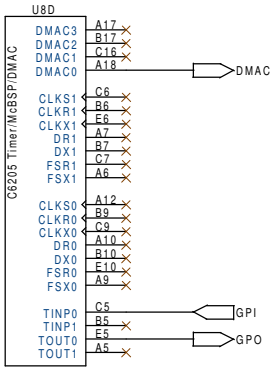

Texas instruments		
Title: C6205 Multiprocessor PCI Board		
Size: B	Document Number: C6205-MPBSCH-0001	Rev: 1.0
Date: Tuesday, January 23, 2001	Sheet 14 of 45	

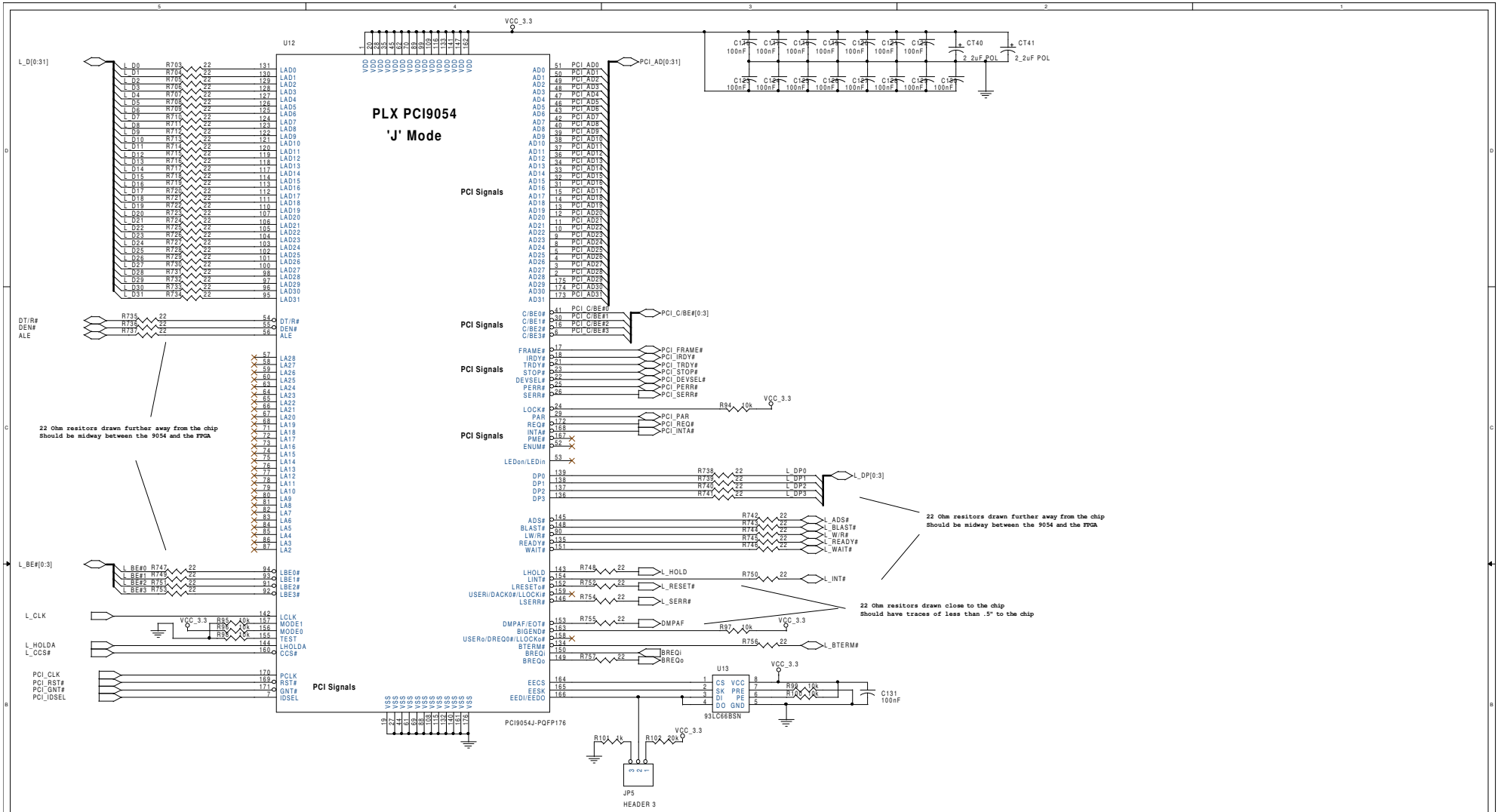

Texas instruments		
Title	C6205 Multiprocessor PCI Board	
Size C	Document Number C6205-MPBSCH-0001	Rev 1.0
Date: Saturday, September 16, 2000	Sheet 15 of 45	

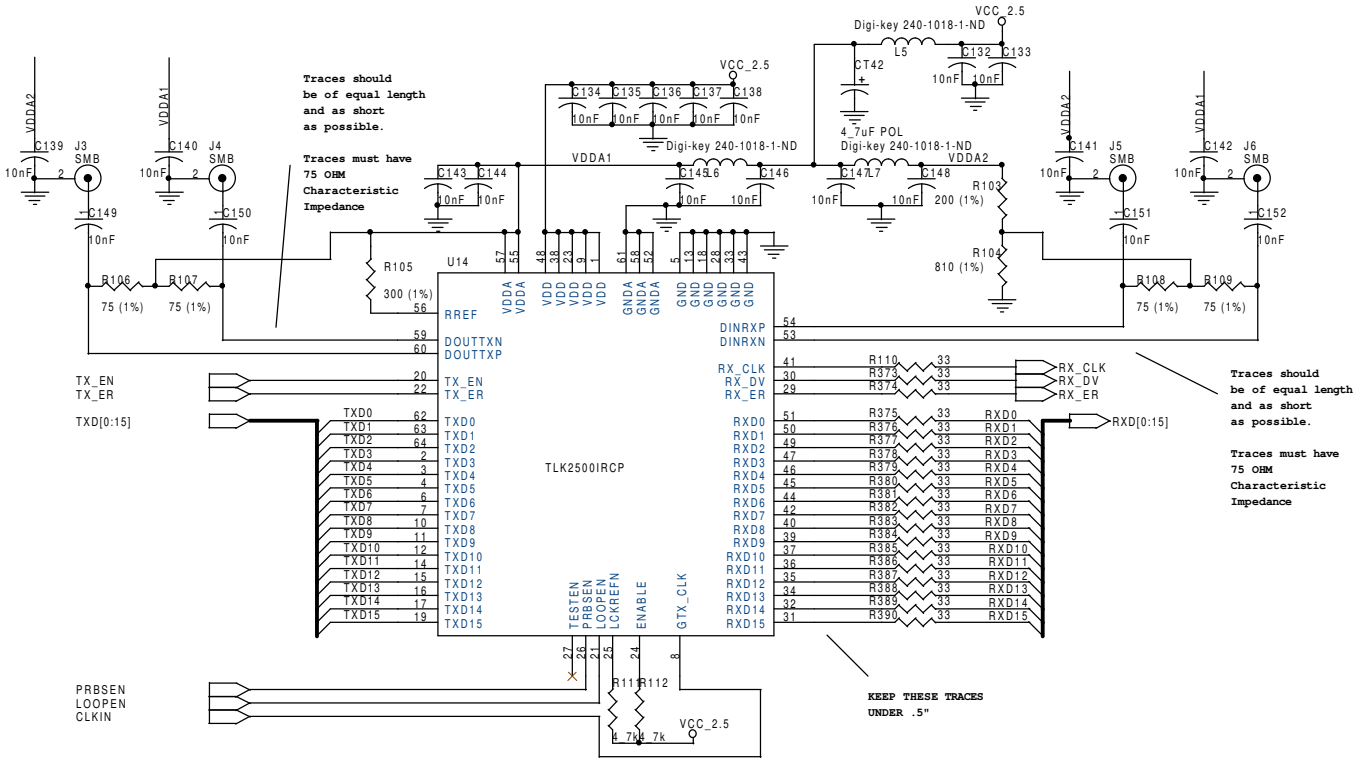

Texas instruments		
Title: C6205 Multiprocessor PCI Board		
Size: B	Document Number: C6205-MPBSCH-0001	Rev: 1.0
Date: Monday, September 25, 2000	Sheet 16 of 45	

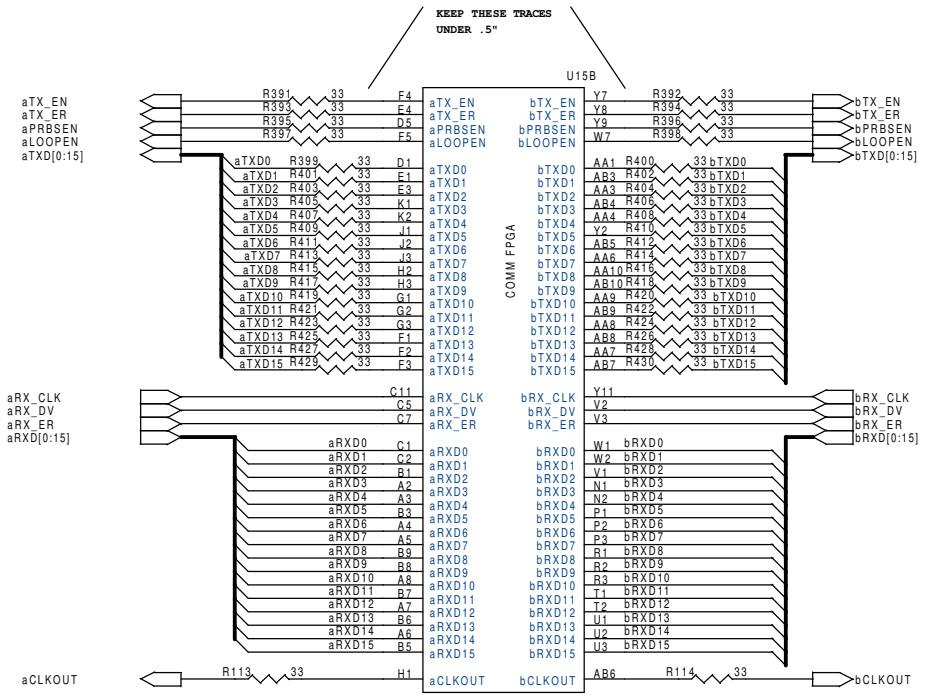

Texas instruments		
Title: C6205 Multiprocessor PCI Board		
Size: B	Document Number: C6205-MPBSCH-0001	Rev: 1.0
Date: Thursday, October 05, 2000	Sheet 17 of 45	

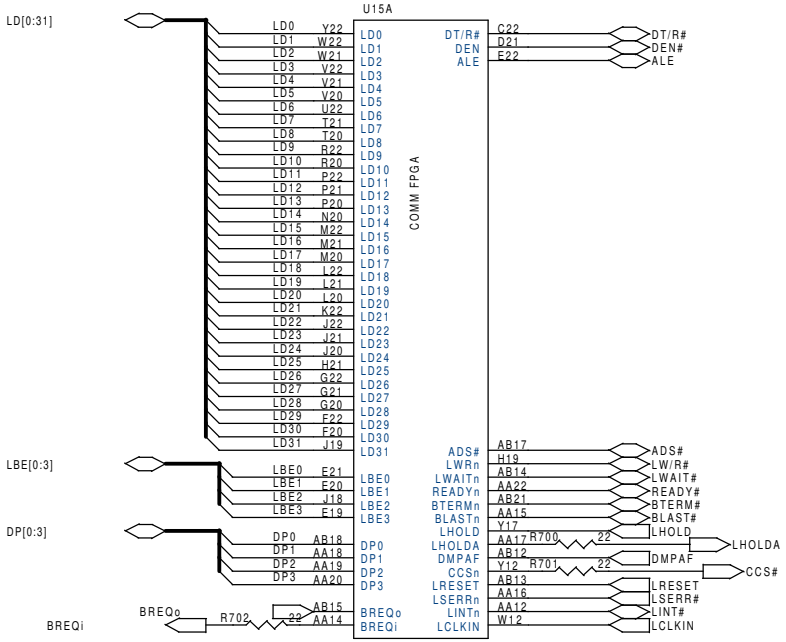

Texas instruments		
Title: C6205 Multiprocessor PCI Board		
Size: B	Document Number: C6205-MPBSCH-0001	Rev: 1.0
Date: Thursday, October 05, 2000	Sheet 18 of 45	

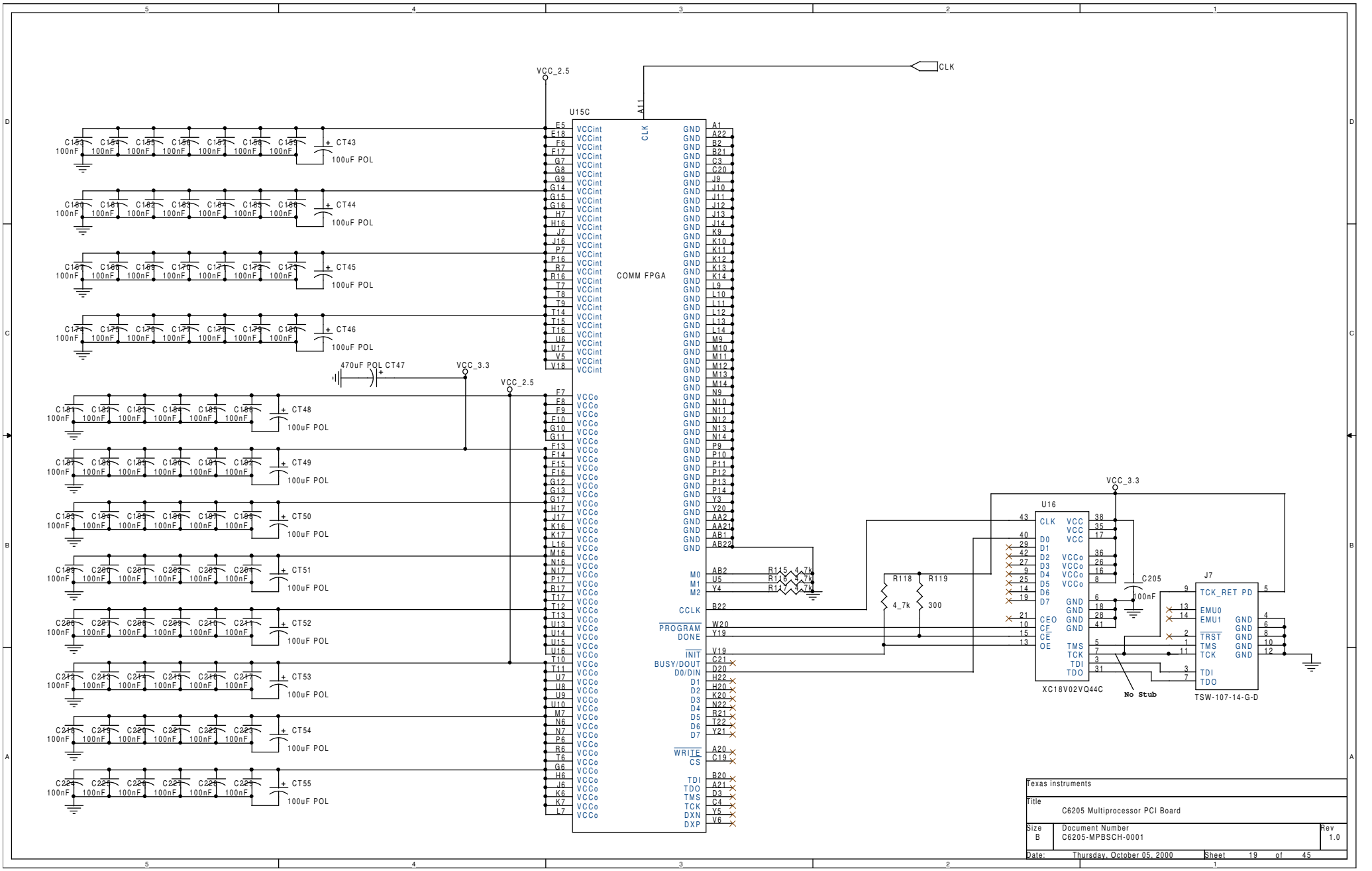

Texas instruments			
Title: C6205 Multiprocessor PCI Board			
Size: B	Document Number: C6205-MPBSCH-0001		Rev: 1.0
Date: Thursday, October 05, 2000	Sheet 19 of 45		

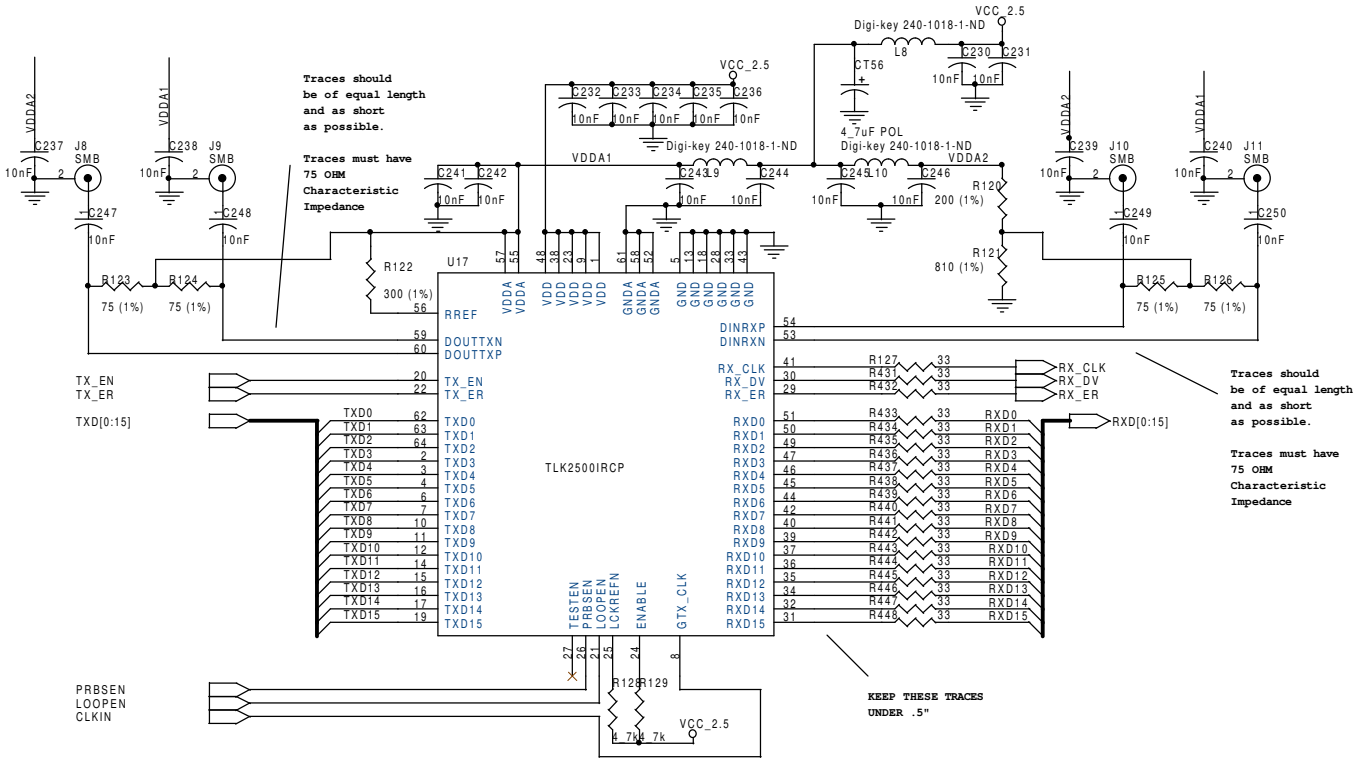

Texas instruments		
Title: C6205 Multiprocessor PCI Board		
Size: B	Document Number: C6205-MPBSCH-0001	Rev: 1.0
Date: Monday, September 25, 2000	Sheet 20 of 45	

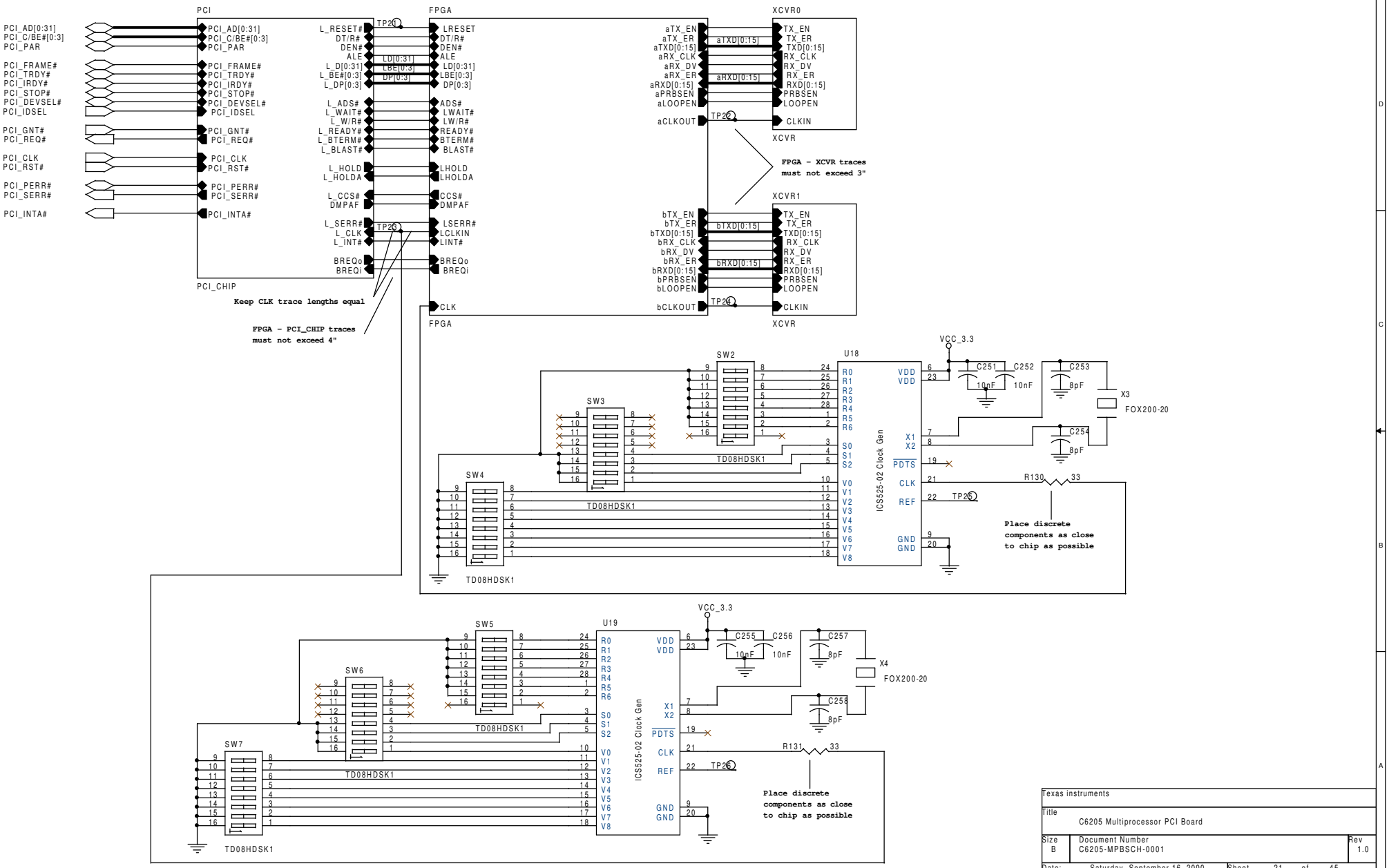
PCI
FPGA
XCVR0
XCVR1
PCI_CHIP
FPGA
XCVR
XCVR
PCI_AD[0:31]
PCI_C/BE#[0:3]
PCI_PAR
PCI_FRAME#
PCI_TRDY#
PCI_IRDY#
PCI_STOP#
PCI_DEVSEL#
PCI_IDSEL
PCI_GNT#
PCI_REQ#
PCI_CLK
PCI_RST#
PCI_PERR#
PCI_SERR#
PCI_INTA#
L_RESET#
DT/R#
DEN#
ALE
LD[0:31]
LBE[0:3]
DP[0:3]
L_ADS#
L_WAIT#
L_W/R#
L_READY#
L_BTERM#
L_BLAST#
L_HOLD
L_HOLDA
L_CCS#
DMPAF
L_SERR#
L_CLK
L_INT#
BREQo
BREQi
LRESET
DT/R#
DEN#
ALE
LD[0:31]
LBE[0:3]
DP[0:3]
ADS#
LWAIT#
LW/R#
READY#
BTERM#
BLAST#
LHOLD
LHOLDA
CCS#
DMPAF
LSERR#
LCLKIN
LINT#
BREQo
BREQi
CLK
aTX_EN
aTX_ER
aTXD[0:15]
aRX_CLK
aRX_DV
aRX_ER
aRXD[0:15]
aPRBSEN
aLOOPEN
aCLKOUT
bTX_EN
bTX_ER
bTXD[0:15]
bRX_CLK
bRX_DV
bRX_ER
bRXD[0:15]
bPRBSEN
bLOOPEN
bCLKOUT
TX_EN
TX_ER
TXD[0:15]
RX_CLK
RX_DV
RX_ER
RXD[0:15]
PRBSEN
LOOPEN
CLKIN
FPGA – XCVR traces must not exceed 3"
Keep CLK trace lengths equal
FPGA – PCI_CHIP traces must not exceed 4"
SW2
SW3
SW4
SW5
SW6
SW7
TD08HDSK1
U18
U19
ICS525-02 Clock Gen
VCC_3.3
C251
C252
C253
C254
C255
C256
C257
C258
10nF
8pF
X3
X4
FOX200-20
R130
R131
33
Place discrete components as close to chip as possible
Texas instruments
Title
C6205 Multiprocessor PCI Board
Size
B
Document Number
C6205-MPBSCH-0001
Rev
1.0
Date:
Saturday, September 16, 2000
Sheet
21
of
45

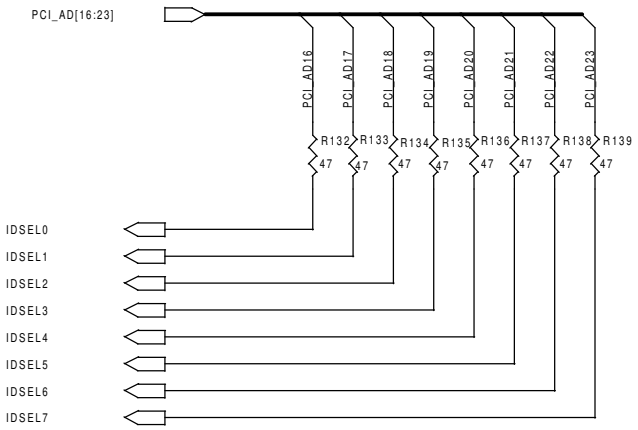

Texas instruments		
Title: C6205 Multiprocessor PCI Board		
Size: B	Document Number: C6205-MPBSCH-0001	Rev: 1.0
Date: Monday, August 14, 2000	Sheet 22 of 45	

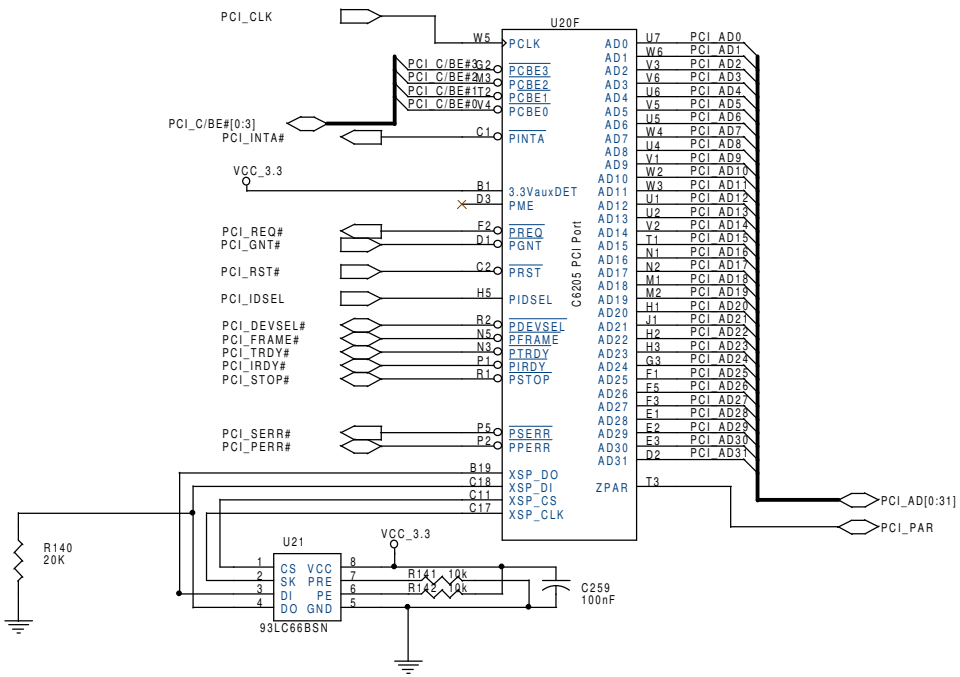

Texas instruments		
Title: C6205 Multiprocessor PCI Board		
Size: B	Document Number: C6205-MPBSCH-0001	Rev: 1.0
Date: Tuesday, January 23, 2001	Sheet 23 of 45	

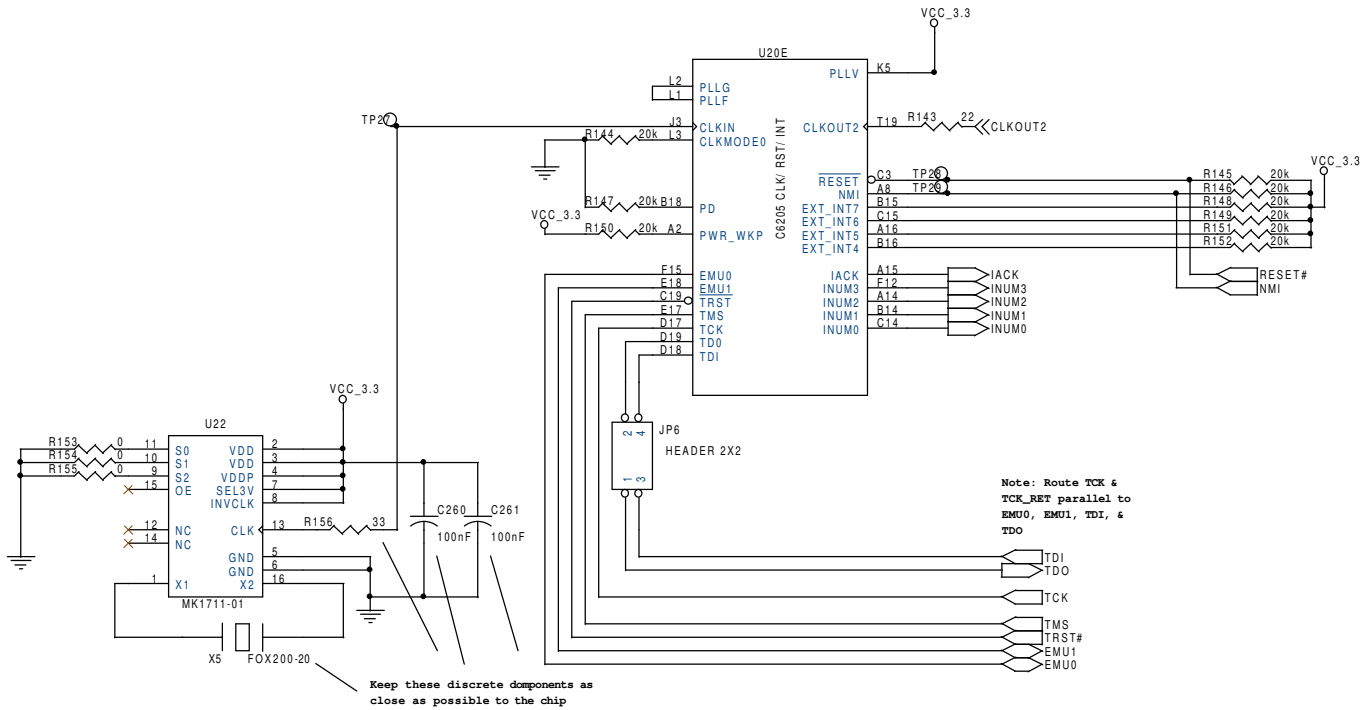

Texas instruments		
Title: C6205 Multiprocessor PCI Board		
Size: B	Document Number: C6205-MPBSCH-0001	Rev: 1.0
Date: Tuesday, January 23, 2001	Sheet 24 of 45	

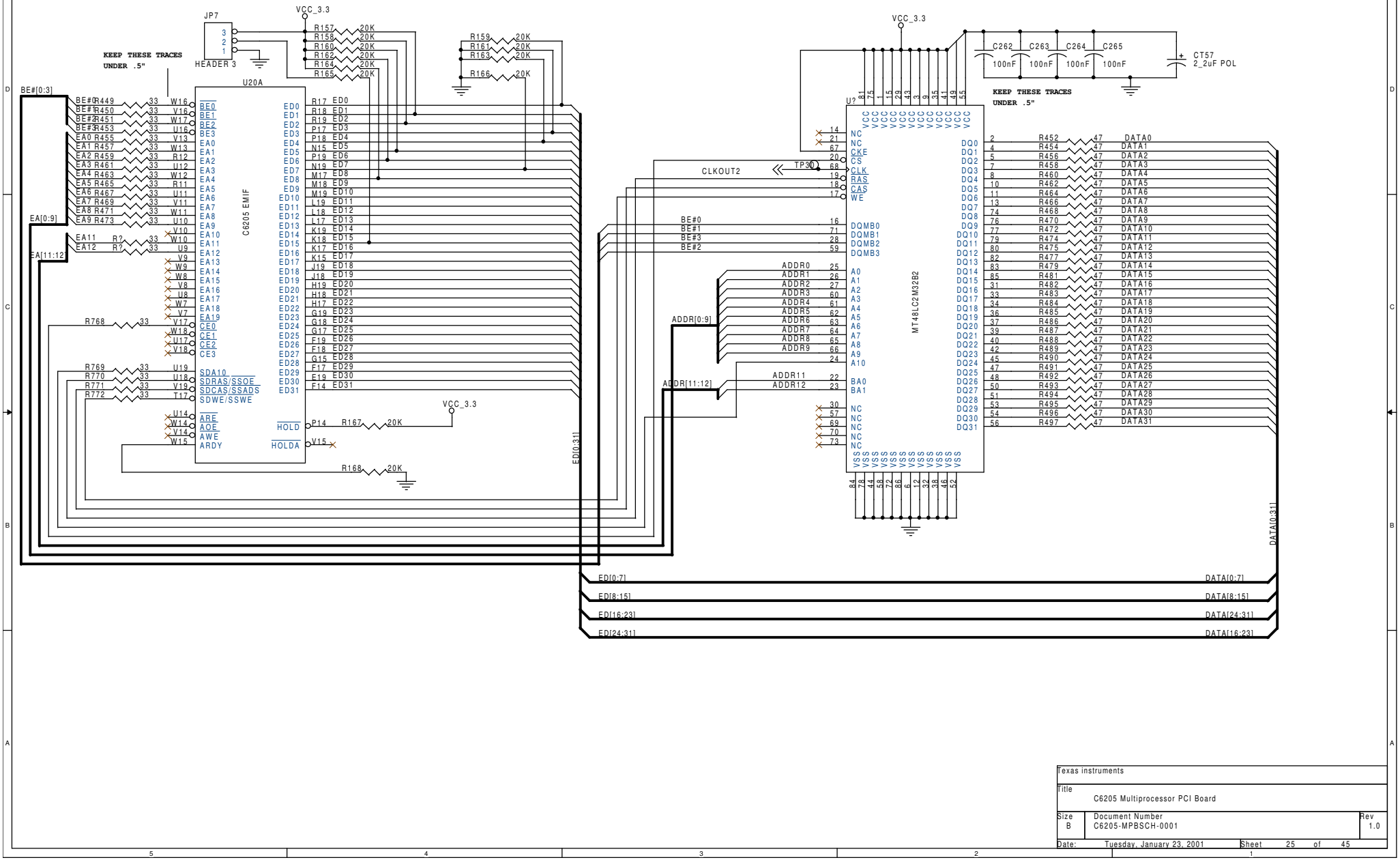

Texas instruments		
Title: C6205 Multiprocessor PCI Board		
Size: B	Document Number: C6205-MPBSCH-0001	Rev: 1.0
Date: Tuesday, January 23, 2001	Sheet 25 of 45	

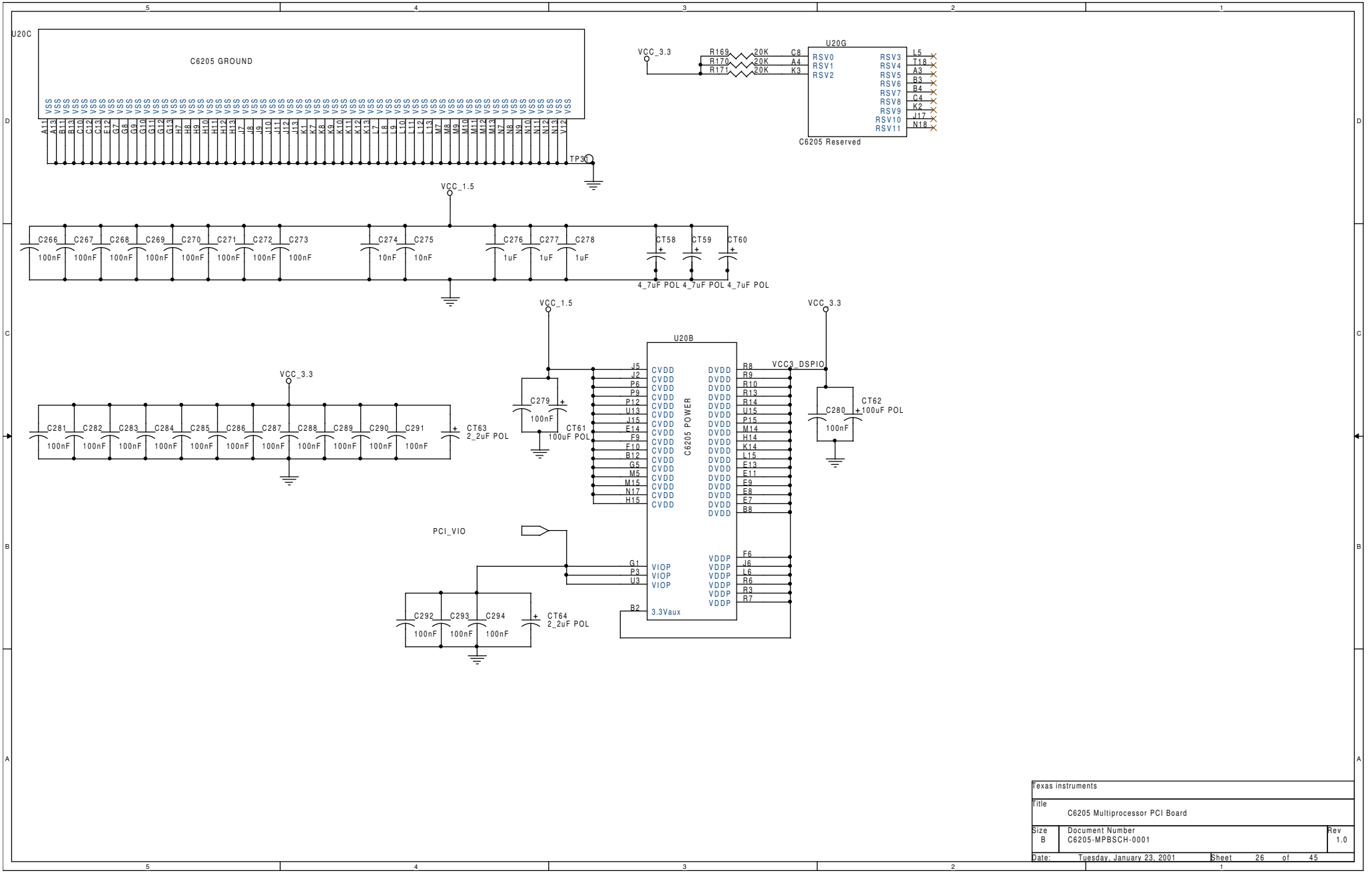

Texas instruments		
Title: C6205 Multiprocessor PCI Board		
Size: B	Document Number: C6205-MPBSCH-0001	Rev: 1.0
Date: Tuesday, January 23, 2001	Sheet 26 of 45	

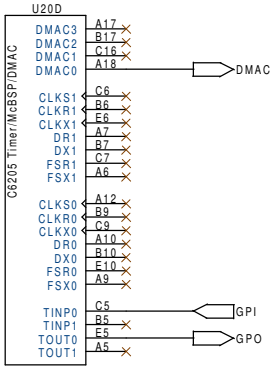

Texas instruments		
Title: C6205 Multiprocessor PCI Board		
Size: B	Document Number: C6205-MPBSCH-0001	Rev: 1.0
Date: Tuesday, January 23, 2001	Sheet 27 of 45	

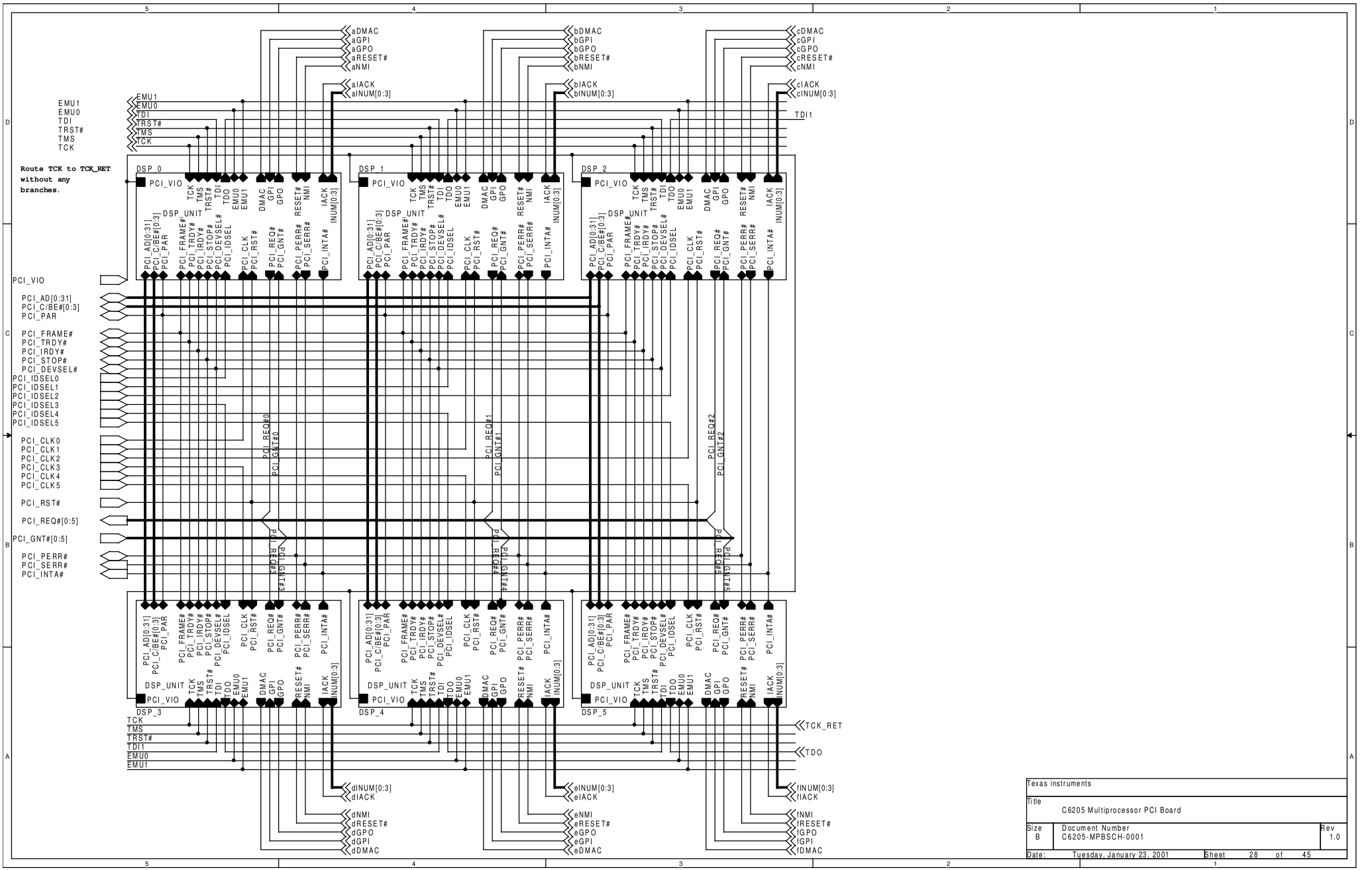

Texas instruments		
Title: C6205 Multiprocessor PCI Board		
Size: B	Document Number: C6205-MPBSCH-0001	Rev: 1.0
Date: Tuesday, January 23, 2001	Sheet 28 of 45	

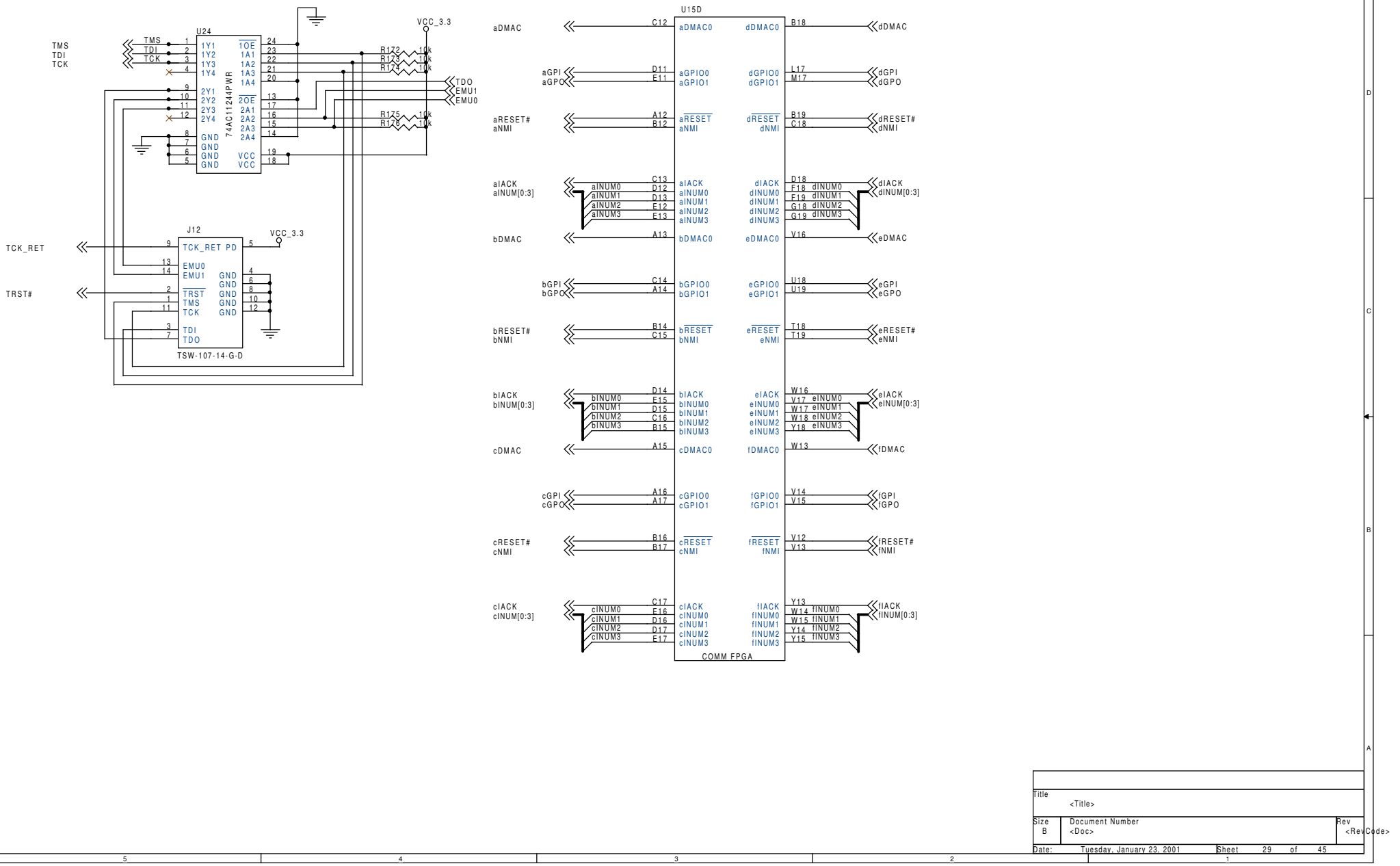

Title	<Title>	
Size B	Document Number <Doc>	Rev <RevCode>
Date: Tuesday, January 23, 2001	Sheet 29 of 45	

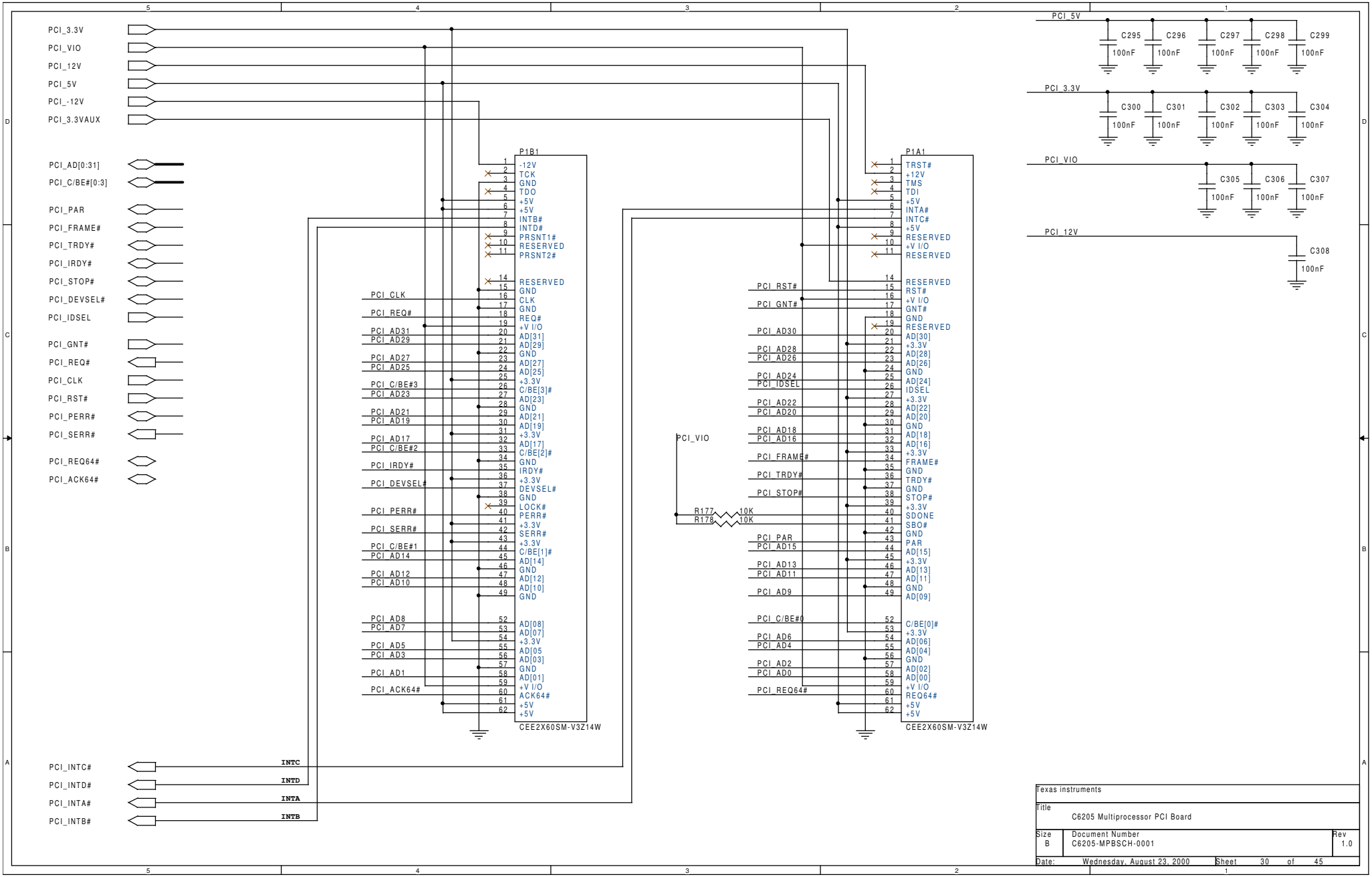

Texas instruments		
Title: C6205 Multiprocessor PCI Board		
Size: B	Document Number: C6205-MPBSCH-0001	Rev: 1.0
Date: Wednesday, August 23, 2000	Sheet 30 of 45	

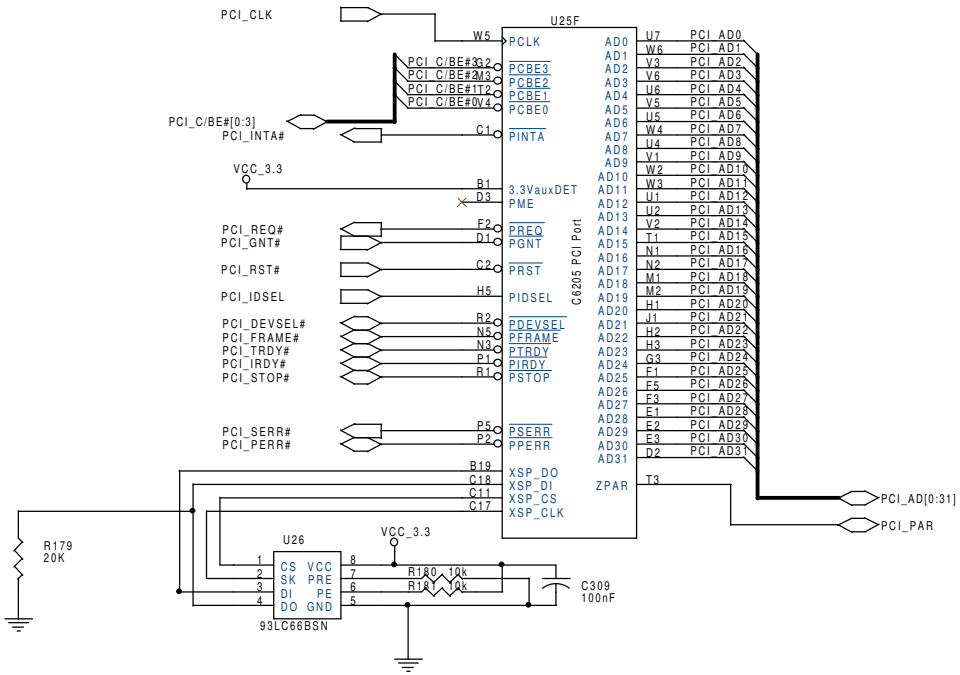

Texas instruments		
Title: C6205 Multiprocessor PCI Board		
Size: B	Document Number: C6205-MPBSCH-0001	Rev: 1.0
Date: Tuesday, January 23, 2001	Sheet 31 of 45	

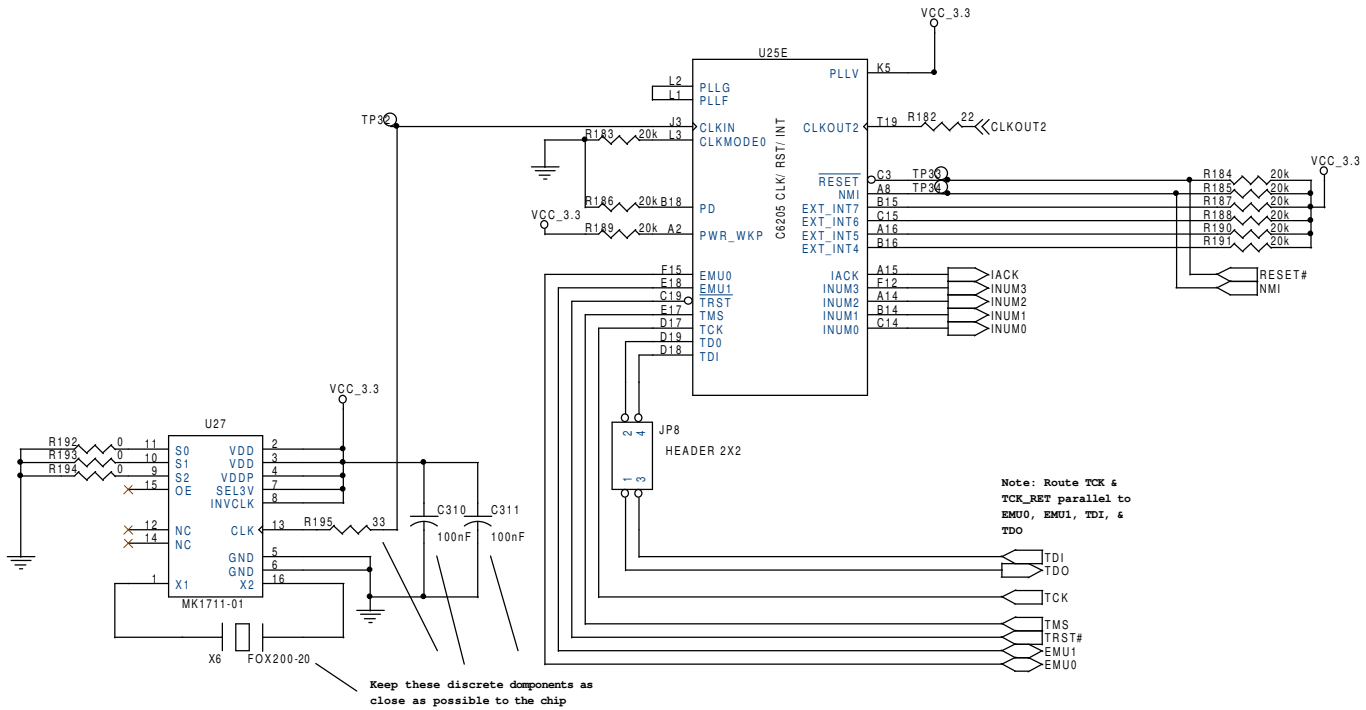

Texas instruments		
Title: C6205 Multiprocessor PCI Board		
Size: B	Document Number: C6205-MPBSCH-0001	Rev: 1.0
Date: Tuesday, January 23, 2001	Sheet 32 of 45	

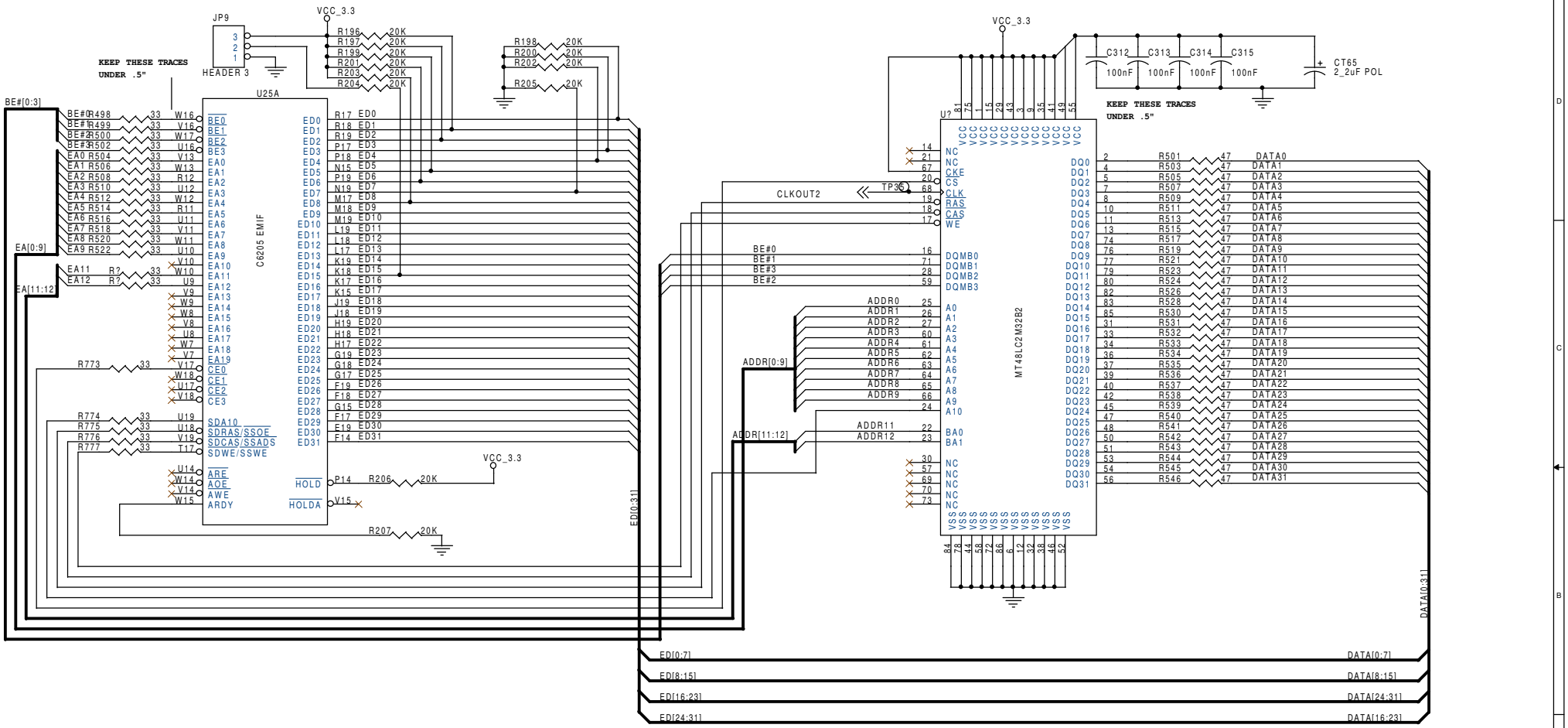

Texas instruments			
Title: C6205 Multiprocessor PCI Board			
Size: B	Document Number: C6205-MPBSCH-0001		Rev: 1.0
Date: Tuesday, January 23, 2001	Sheet 33 of 45		

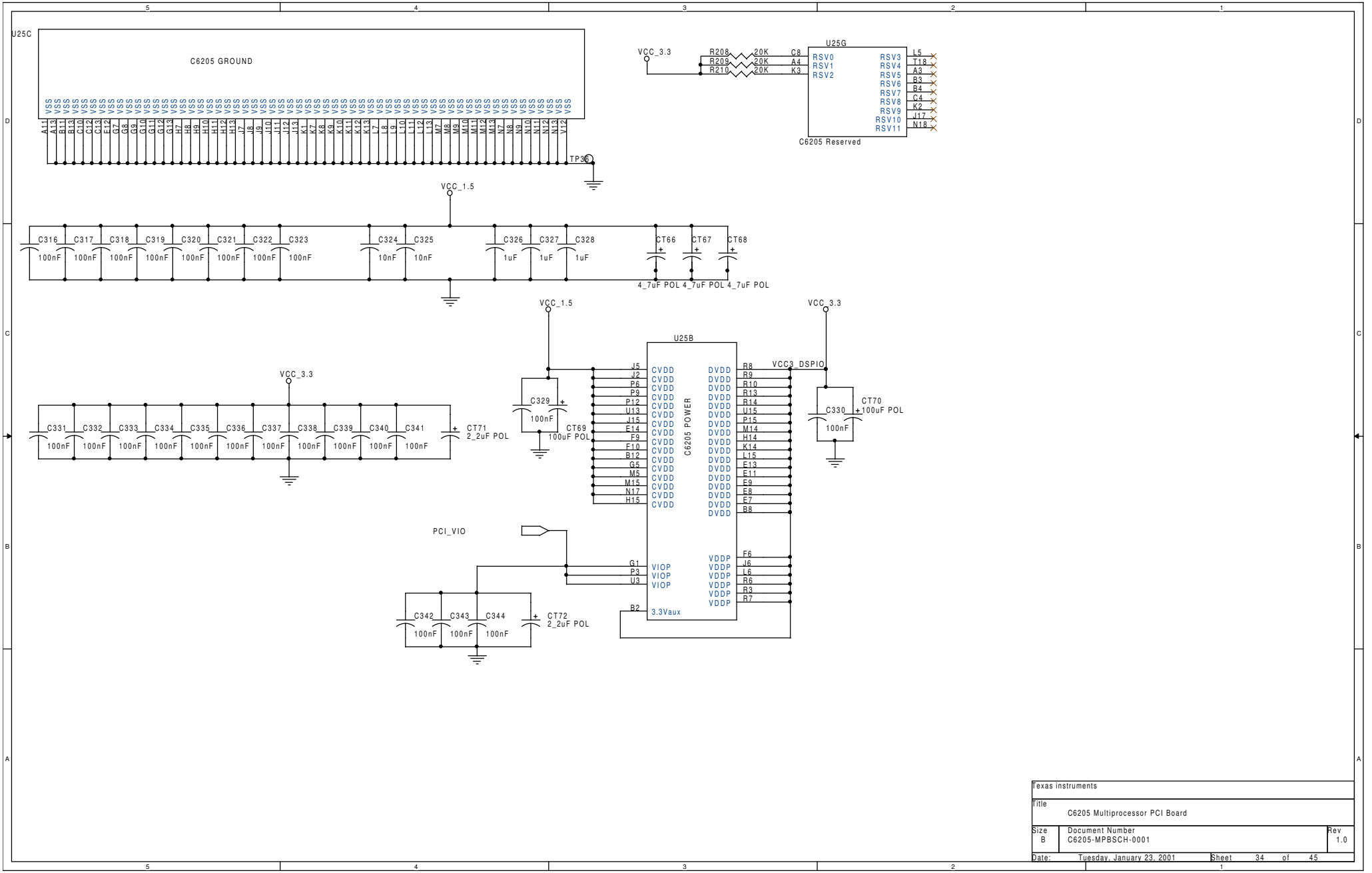

Texas instruments		
Title: C6205 Multiprocessor PCI Board		
Size: B	Document Number: C6205-MPBSCH-0001	Rev: 1.0
Date: Tuesday, January 23, 2001	Sheet 34 of 45	

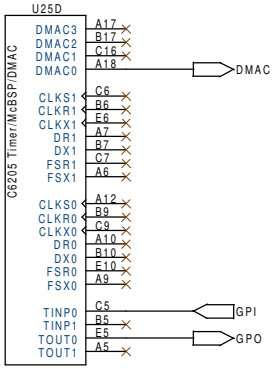

Texas instruments		
Title: C6205 Multiprocessor PCI Board		
Size: B	Document Number: C6205-MPBSCH-0001	Rev: 1.0
Date: Tuesday, January 23, 2001	Sheet 35 of 45	

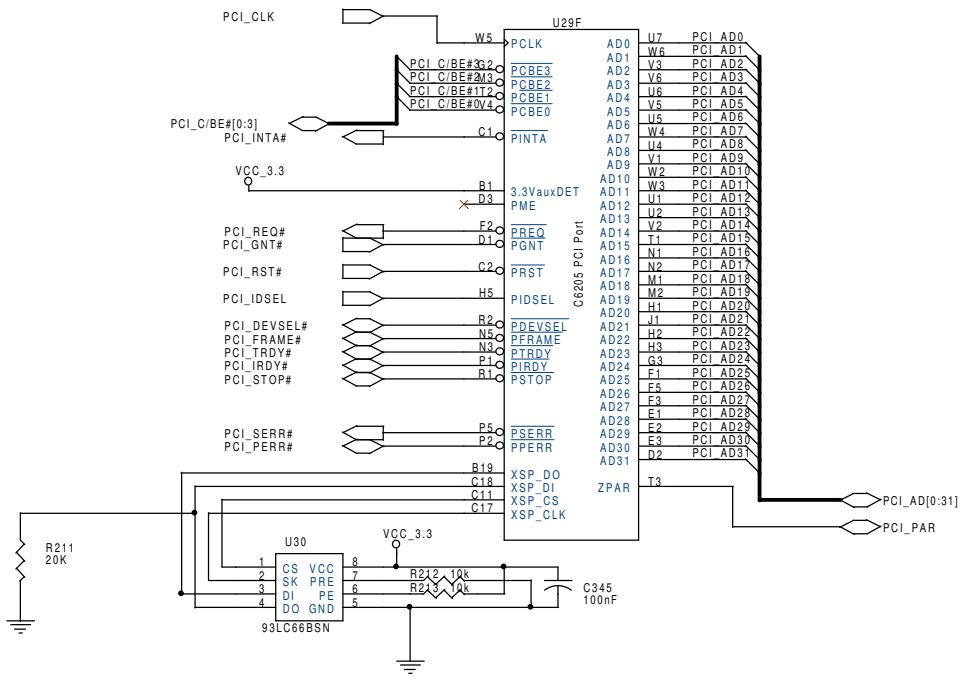

Texas instruments		
Title: C6205 Multiprocessor PCI Board		
Size: B	Document Number: C6205-MPBSCH-0001	Rev: 1.0
Date: Tuesday, January 23, 2001	Sheet 36 of 45	

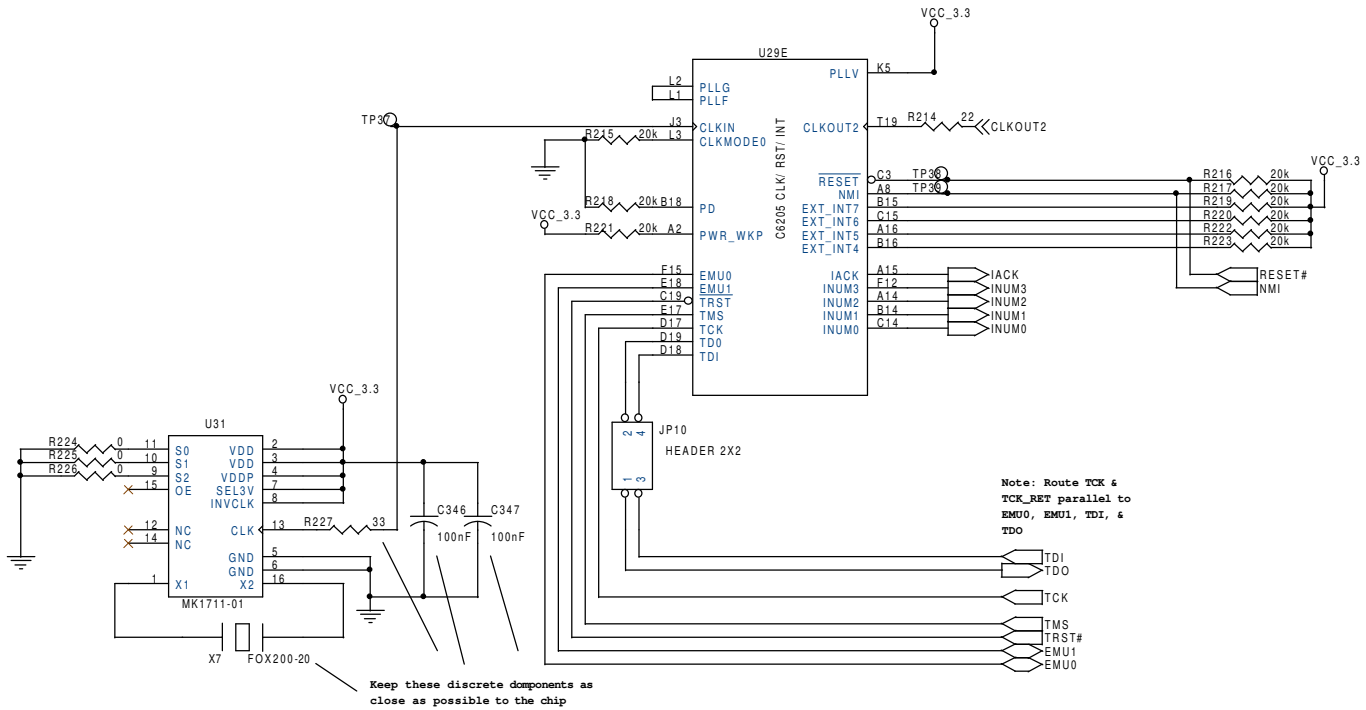

Texas instruments		
Title: C6205 Multiprocessor PCI Board		
Size: B	Document Number: C6205-MPBSCH-0001	Rev: 1.0
Date: Tuesday, January 23, 2001	Sheet 37 of 45	

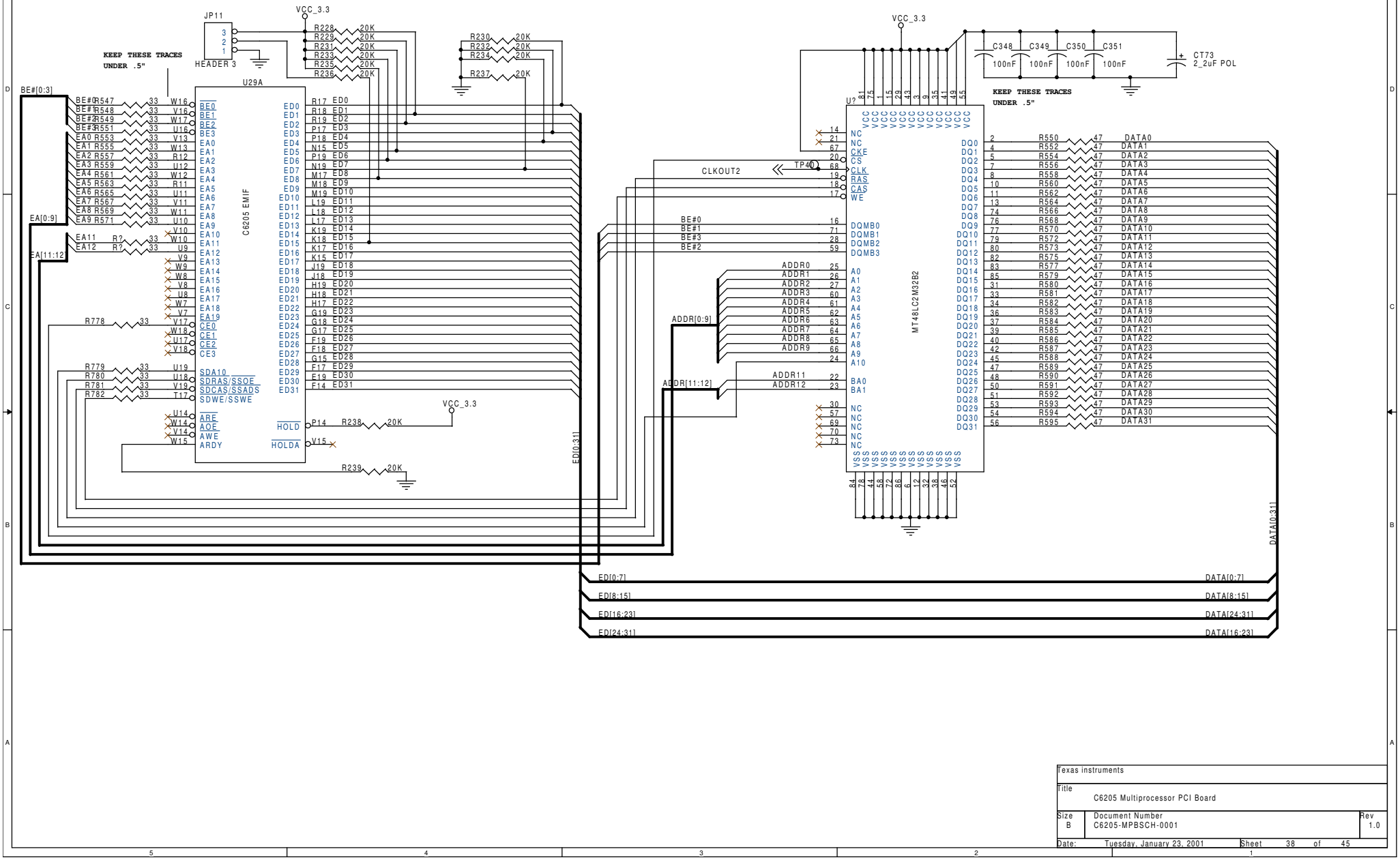

Texas instruments		
Title: C6205 Multiprocessor PCI Board		
Size: B	Document Number: C6205-MPBSCH-0001	Rev: 1.0
Date: Tuesday, January 23, 2001	Sheet 38 of 45	

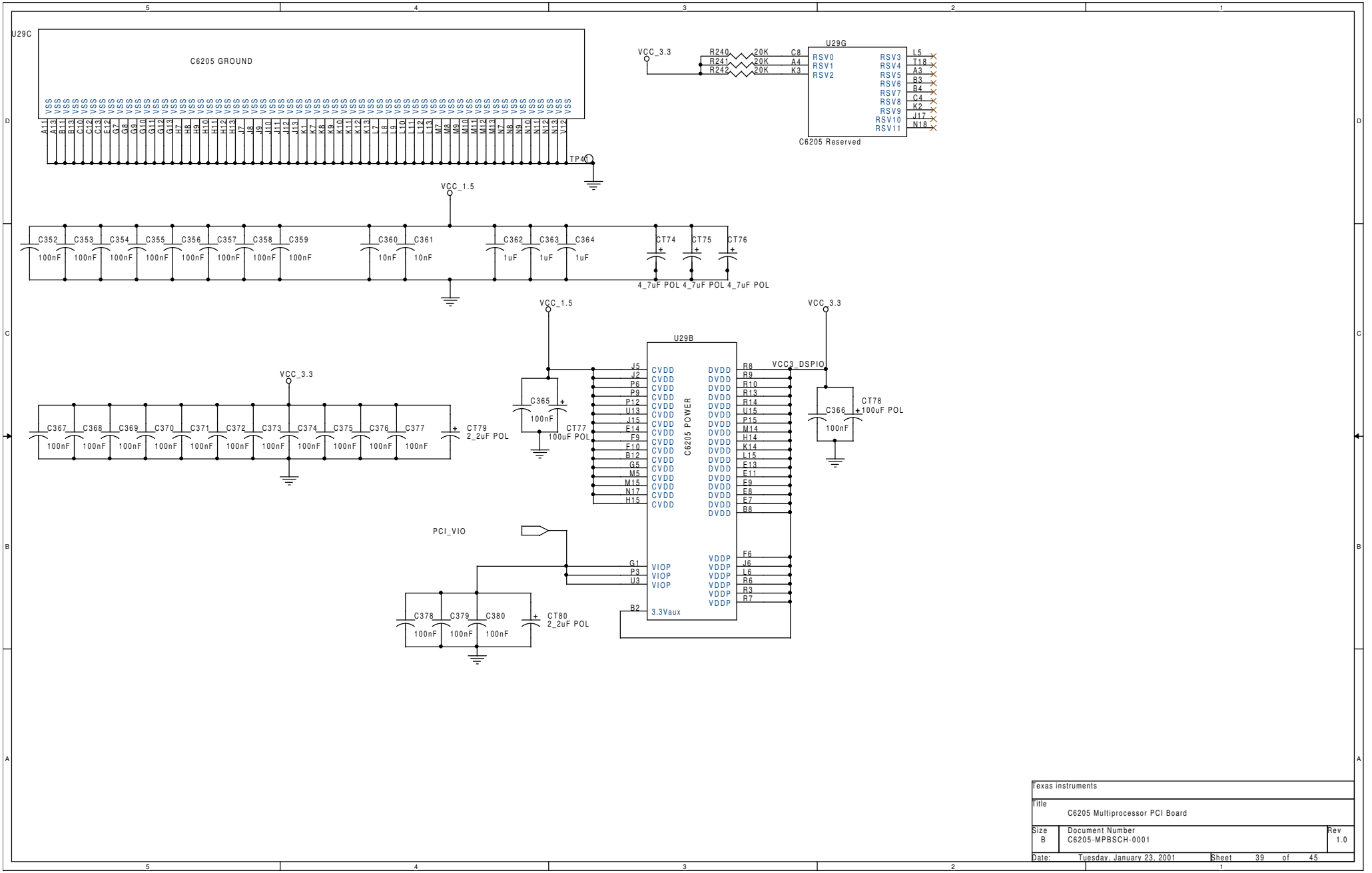

Texas instruments		
Title: C6205 Multiprocessor PCI Board		
Size: B	Document Number: C6205-MPBSCH-0001	Rev: 1.0
Date: Tuesday, January 23, 2001	Sheet 39 of 45	

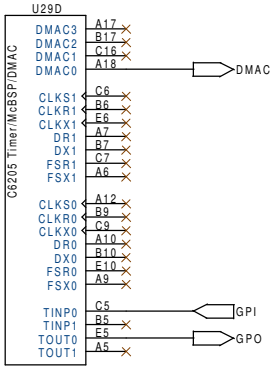

Texas instruments		
Title: C6205 Multiprocessor PCI Board		
Size: B	Document Number: C6205-MPBSCH-0001	Rev: 1.0
Date: Tuesday, January 23, 2001	Sheet 40 of 45	

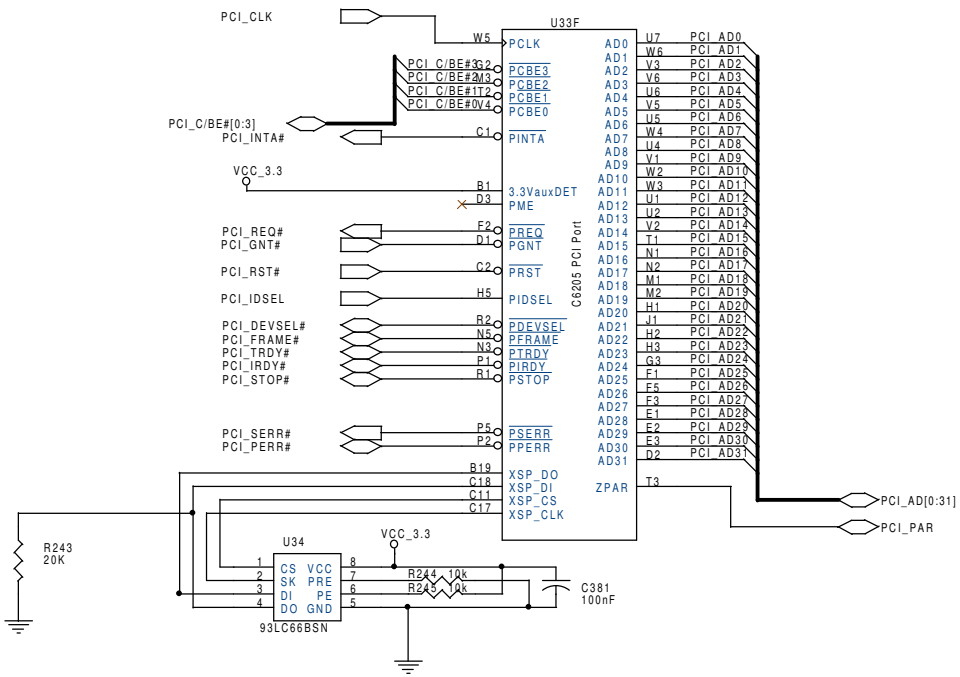

Texas instruments		
Title: C6205 Multiprocessor PCI Board		
Size: B	Document Number: C6205-MPBSCH-0001	Rev: 1.0
Date: Tuesday, January 23, 2001	Sheet 41 of 45	

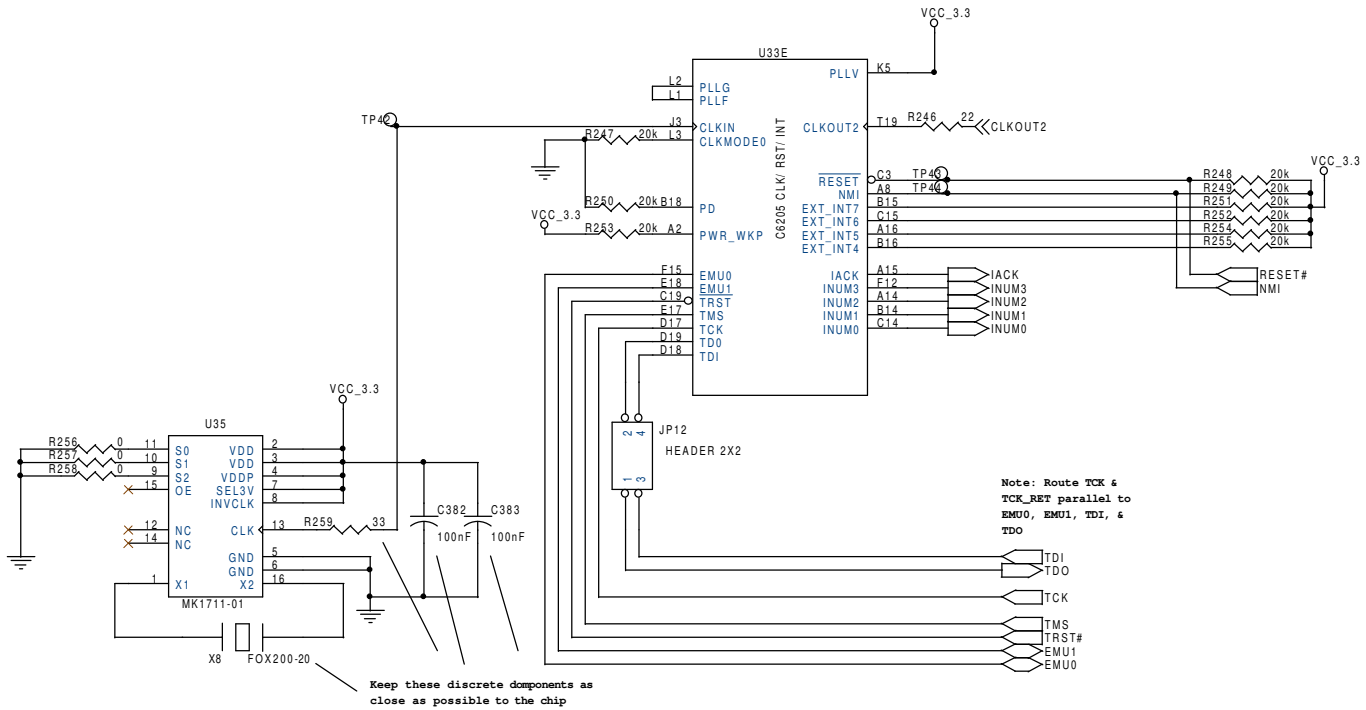

Texas instruments		
Title: C6205 Multiprocessor PCI Board		
Size: B	Document Number: C6205-MPBSCH-0001	Rev: 1.0
Date: Tuesday, January 23, 2001	Sheet 42 of 45	

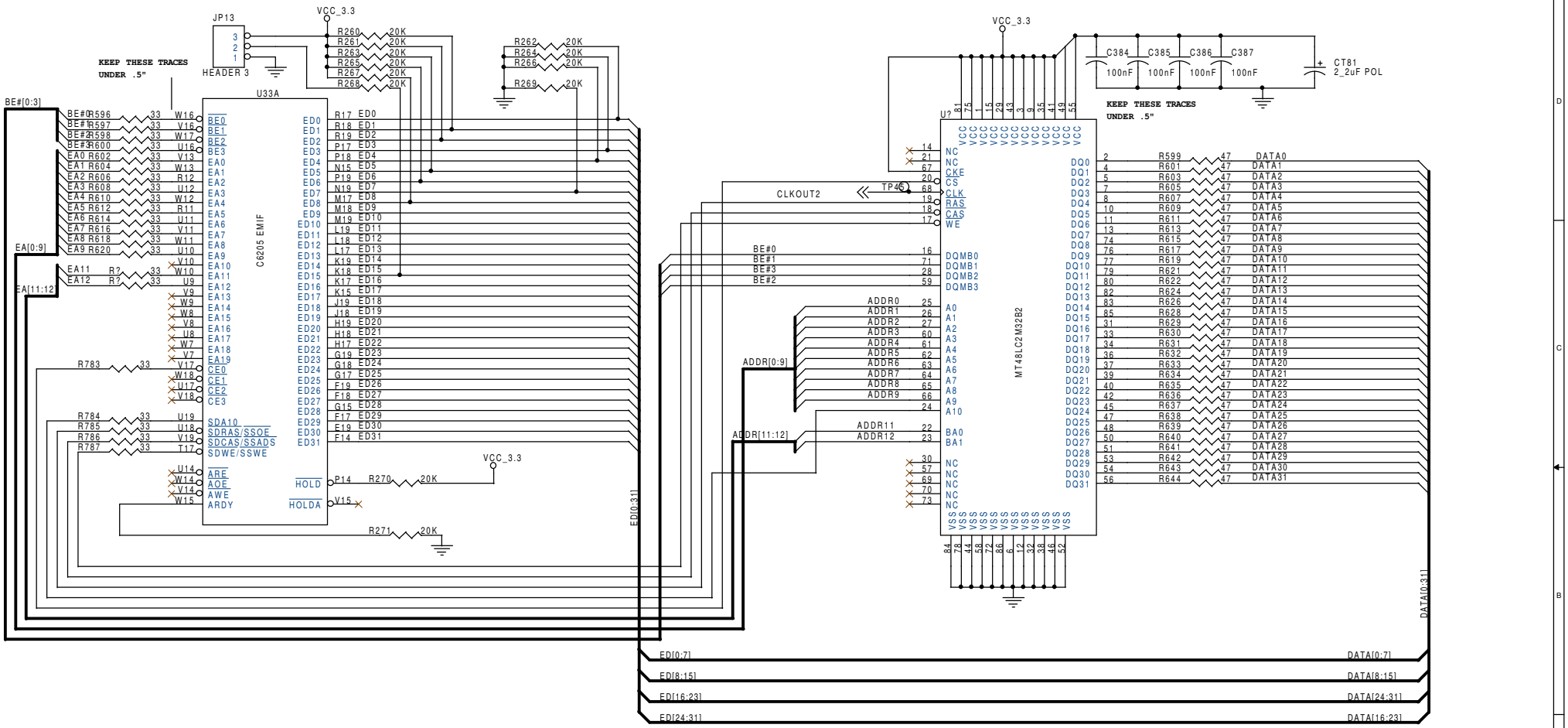

Texas instruments		
Title: C6205 Multiprocessor PCI Board		
Size: B	Document Number: C6205-MPBSCH-0001	Rev: 1.0
Date: Tuesday, January 23, 2001	Sheet 43 of 45	

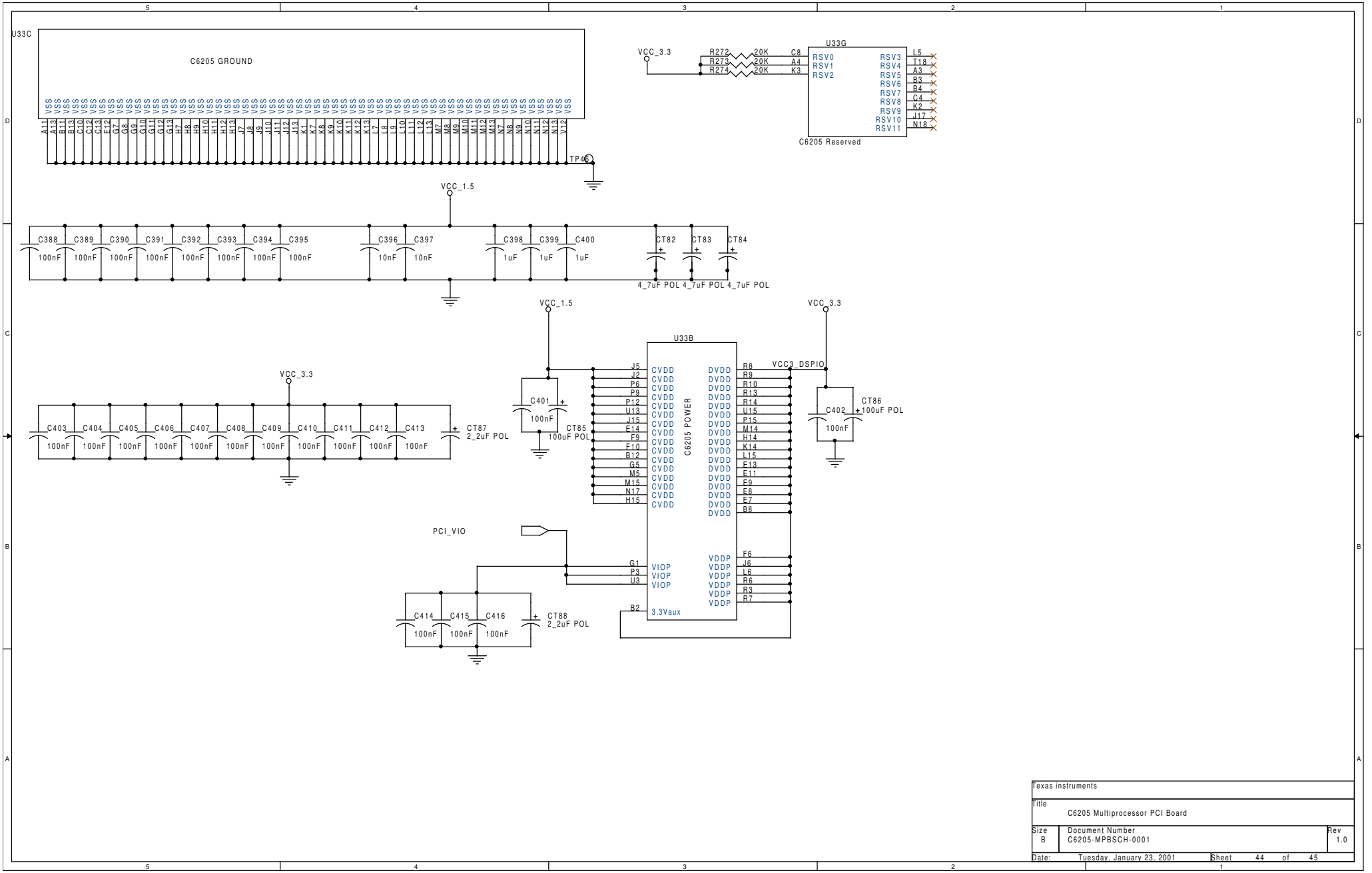

Texas instruments		
Title: C6205 Multiprocessor PCI Board		
Size: B	Document Number: C6205-MPBSCH-0001	Rev: 1.0
Date: Tuesday, January 23, 2001	Sheet 44 of 45	

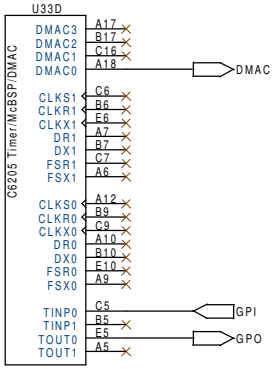

Texas instruments		
Title: C6205 Multiprocessor PCI Board		
Size: B	Document Number: C6205-MPBSCH-0001	Rev: 1.0
Date: Tuesday, January 23, 2001	Sheet 45 of 45	